GEARKO

www.gearkoreducer.com

America Sales Representative
2406 Felts Ave, Nashville,
TN 37211, United States
Email: info@gearkoreducer.com

America Sales Representative
11716 Oshawa St., Indianapolis,
IN 46236, United States
Email: info@gearkoreducer.com

Brazil Distributor
Rua Orlando Pinto,
68 Bairro Jardim Santa Rosa,
CIDADE: ITU
Estado: SÃO PAULO,
Zip code: 13.3309-774
Email: info@gearkoreducer.com

Canada Sales Office
403 Allen CRT, Richmond Hill,
Toronto, Canada L4C 1G4
Email: info@gearkoreducer.com

India Sales Representative
Rajas Enclave Building, Near
Wonedrcity, Katraj,
Pune, India 411046
Email:Info@gearkoreducer.com

Korea Distributor
137-7, Techno 1-ro,Yuseong-Gu,
Daejeon, Republic of Korea
Email: Info@gearkoreducer.com

GEARKO 2021

GEARKO

PRODUCT CATALOG

PASSION FOR PRECISION TRANSMISSION

PRECISION PLANETARY REDUCER

High Precision / High Rigidity / High Reliability

Advanced Technology

High-end Design

Customer Support

Know-how Process

> “We customize high precision, high rigidity, high reliability planetary reducers for our customers.”

High Output Torque

Light Reliability

Maintenance Free

Customization Service

GEARKO

DRIVES THE PRECISION

CONTENTS

TABLE OF CONTENTS

GEARBOX SELECTION REFERENCE TABLE	01
EXPLODED VIEW	03
TB SERIES	05
TBR SERIES	19
TD SERIES	31
TDR SERIES	43
TE SERIES	53
TER SERIES	67
TF SERIES	77
TCB SERIES	87
TCBR SERIES	99
TCE SERIES	107
TM SERIES	115

Gearbox Selection Reference Table*

Innovative And Advanced Solutions To Maximize Customer Value

Gearbox Selection Reference Table											
Product Line Series	TB	TBR	TD	TDR		TE	TER	TF	TCB	TCBR	TCE
Backlash Range (for single stage)	⩽5	⩽6	⩽5	⩽6		⩽5	⩽6	⩽5	⩽8	⩽8	⩽5
Lowest Backlash Available (for single stage)	⩽1	⩽2	⩽1	⩽2		⩽3	⩽4	⩽1	⩽3	⩽4	⩽3
Frame Size	042/060/090/ 115/142/180/ 220 (available for customization for beyond 220)	042/060/090/ 115/142/180/	064/090/ 110/140/ 200/255	064/090 / 110/140 /200		050 / 070 / 090 / 120/155/205 /235	070 / 090 / 120/155/205	060 /075/100 /140 /180	042/060/090/120/ 140/180	042/060/090/120	070/090/120/155
Double Stage Available	Yes	Yes	Yes	Yes		Yes	Yes	Yes	Yes	Yes	Yes
All Gearing Helical	Yes	Helical & Spiral Bevel	Yes	Helical & Spiral Bevel		Yes	Helical & Spiral Bevel	Yes	Yes	Yes	Yes
Bearing Load Capacity Rating	High	High	High	High		High	High	Very High	High	High	High
Lubricated for Life	Yes	Yes	Yes	Yes		Yes	Yes	Yes	Yes	Yes	Yes
Efficiency (for one stage)	⩾97%	⩾95%	⩾97%	⩾95%		⩾97%	⩾95%	⩾97%	⩾97%	⩾95%	⩾97%
One-piece Ring Gear & Housing	Yes	Yes	Yes	Yes		Yes	Yes	Yes	Yes	Yes	Yes
Housing Material	Steel	Steel	Steel	Steel		Steel	Steel	Steel	Steel	Steel	Steel
Housing Nickel Plating	Yes	Yes	Yes	Yes		Yes	Yes	Yes	No	No	No
One-piece Output Shaft & Planet Carrier	Yes	Yes	Yes	Yes		Yes	Yes	Yes	Yes	Yes	Yes
One-piece Sun Gear and Input Collet	Yes	Yes	Yes	Yes		Yes	Yes	Yes	No	No	No
Customized Flange for Motor Installation	Yes	Yes	Yes	Yes		Yes	Yes	Yes	Yes	Yes	Yes
Page Range	05-18	19-30	31-42	43-52		53-66	67-76	77-86	87-98	99-106	107-114

*All technical specifications in this brochure were correct at the time of printing. They are subject to change without notice as part of our continuous improvement initiative.

ADVANCED TECHNOLOGY TO MAKE THE DRIVE MORE PRECISELY

GEARKO QUALITY GUARANTEE STABLE AND EFFICIENT PERFORMANCE

TB - 060 - 10 - S1 - P1

Backlash	P0 - Micro Backlash P1 - Reduced Backlash P2 - Standard Backlash
Output Style	S1 - Smooth Output Shaft S2 - Output Shaft with Keyslot
Ratio	One Stage 3、4、5、6、7、8、9、10 Two Stages 15、16、20、25、28、30、35、40、45、50 60、70、80、90、100
Frame Size	060、090、115 etc
Series Name	TB, TD, TE, TF, TC

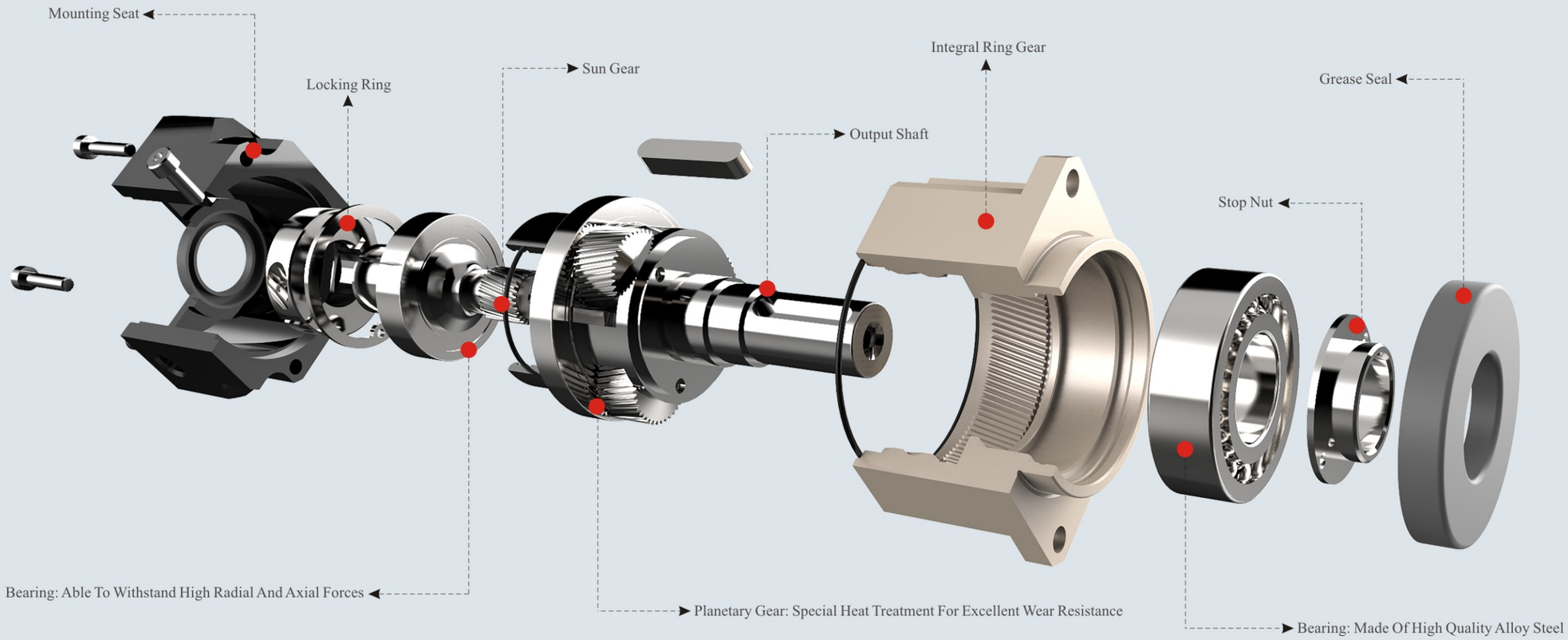

Precision Planetary Reducer

Precise & Efficient

+

TB/TBR SERIES

+

Versatile Applications

TB/TBR Series planetary reducer achieves maximum efficiency even at the highest speed and load.
Robust structure and low backlash enable it to be applied in almost any shaft-output applications.

GEARKO

DRIVES THE PRECISION

TB042 Series

TB042 One Stage

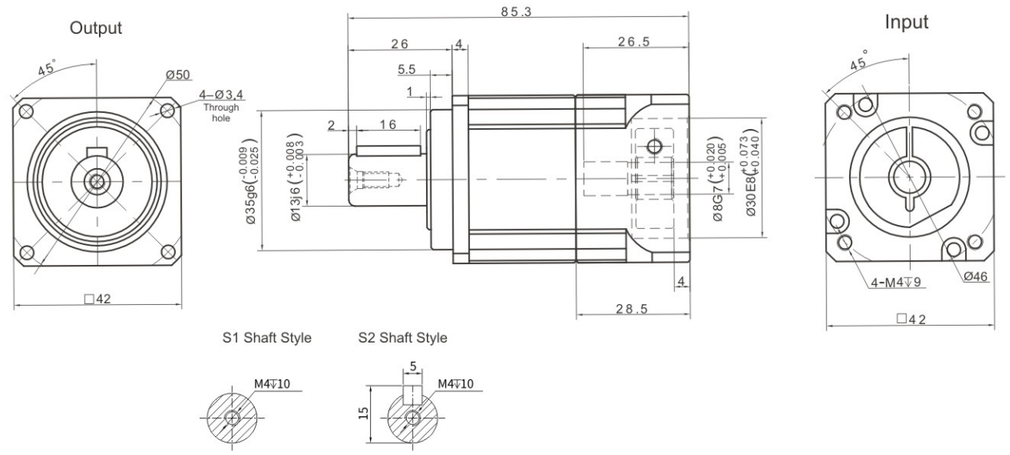

TB042 Two Stage

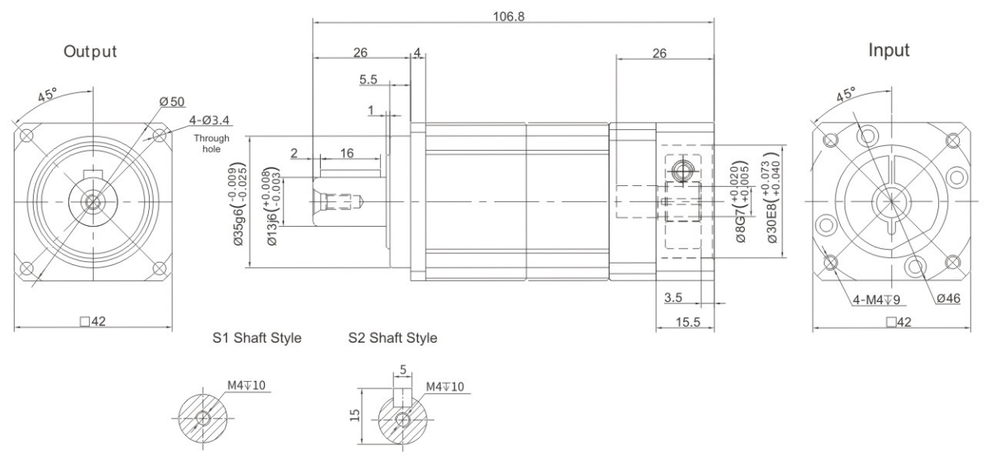

Performance Data

The TB series reducer adopts a standardized flange interface. The installation is convenient and quick. Due to its integral structure design, this high-precision model can operate excellently in many demanding working application.

TB042			One Stage								Two Stage									
Speed Ratio	i		–	4	5	6	7	8	9	10	–	20	25	30	35	40	50	60	70	80	100
Norminal Output Torque	T_1	Nm	–	19	22	20	19	17	-	14	–	19	22	20	19	17	22	20	19	17	14
Emergency Stop Torque	T_2	Nm	$T_1 \times 3$								$T_1 \times 3$										
Norminal Input Speed	S_1	rpm	5000								5000										
Maximum Input Speed	S_2	rpm	10000								10000										
Maximum Output Torque	T_4	Nm	$T_1 \times 3 \times 60\%$								$T_1 \times 3 \times 60\%$										
Maximum Radial Force	F_a	N	780								780										
Maximum Axial Force	F_b	N	390								390										
Torsional Rigidity	-	Nm/arcmin	3								3										
Effciency	η	%	⩾97								⩾94										
Service Life	–	h	20000								20000										
Noise	–	dB	⩽55								⩽55										
Weight	–	Kg	0.6								0.8										
Backlash	P0	arcmin	⩽1								⩽3										
	P1		⩽3								⩽5										
	P2		⩽5								⩽7										
Operating Temperature	–	℃	-20~90								-20~90										
Lubrication	–		Synthetic Grease								Synthetic Grease										
Protection Class	–		IP65								IP65										
Mounting Position	–		Any Direaction								Any Direaction										
Moment of Inertia	J	kg.cm²	0.03								0.03										

Notes:

- Speed ratio (i=Sin/Sout)
- When the output speed is 100 rpm, it acts on the center of the output shaft.
- For continous operation, the service life is no lessthan 10,000 hours.
- The noise value was measured based on the input rotational speed of 3000 rpm, i=10.

Any product models and parameters in this sample are subject to change without prior notice. Please confirm with the company before ordering.

TB060 Series

TB060 One Stage

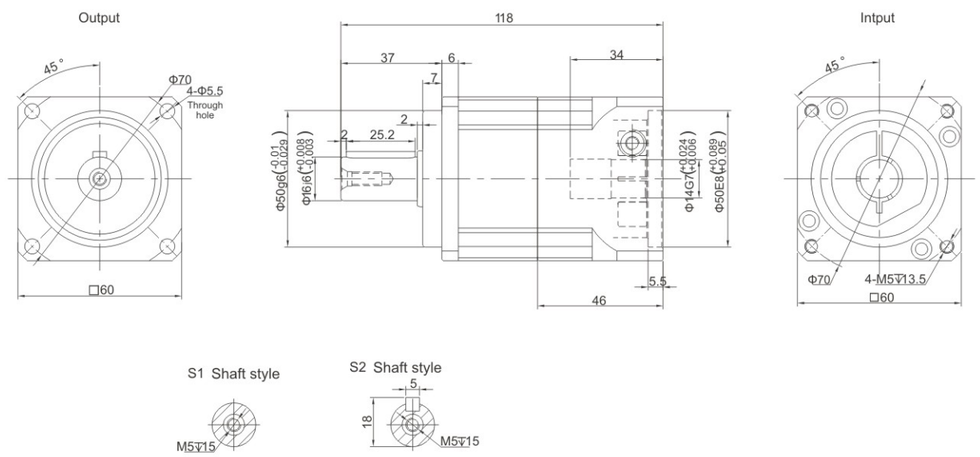

TB060 Two Stage

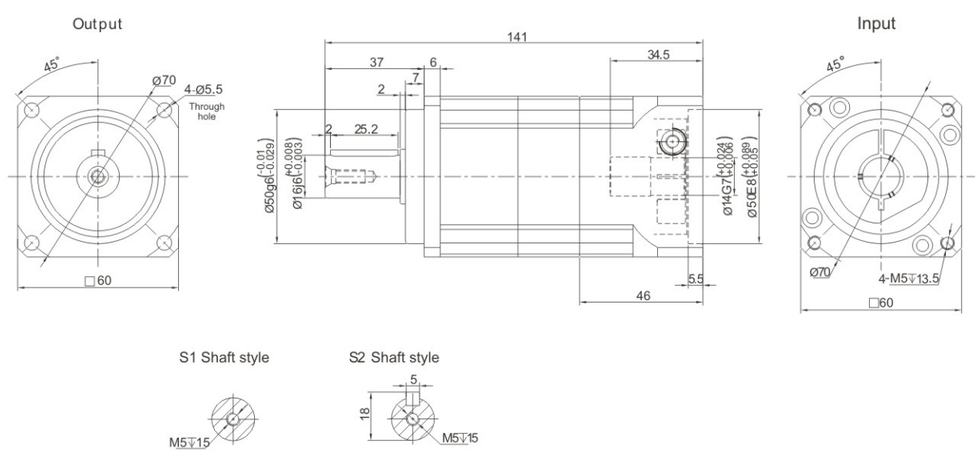

Performance Data

The TB series reducer adopts a standardized flange interface. The installation is convenient and quick. Due to its integral structure design, this high-precision model can operate excellently in many demanding working application.

TB060			One Stage																		
Speed Ratio		i	3	4	5	6	7	8	9	10	15	20	25	30	35	40	50	60	70	80	100
Norminal Output Torque	T_1	Nm	55	50	60	55	50	45	-	40	55	50	60	55	50	45	60	55	50	45	40
Emergency Stop Torque	T_2	Nm	$T_1 \times 3$																		
Norminal Input Speed	S_1	rpm	5000																		
Maximum Input Speed	S_2	rpm	10000																		
Maximum Output Torque	T_4	Nm	$T_1 \times 3 \times 60\%$																		
Maximum Radial Force	F_a	N	1530																		
Maximum Axial Force	F_b	N	765																		
Torsional Rigidity	-	Nm/arcmin	7																		
Effciency	η	%	⩾97																		
Service Life	–	h	20000																		
Noise	–	dB	⩽58																		
Weight	–	Kg	1.3																		
Backlash	P0	arcmin	⩽1																		
	P1		⩽3																		
	P2		⩽5																		
Operating Temperature	–	℃	-20~90																		
Lubrication	–		Synthetic Grease																		
Protection Class	–		IP65																		
Mounting Position	–		Any Direaction																		
Moment of Inertia	J	kg.cm²	0.16	0.14	0.13																

Notes:

- Speed ratio (i=Sin/Sout)
- When the output speed is 100 rpm, it acts on the center of the output shaft.
- For continous operation, the service life is no lessthan 10,000 hours.
- The noise value was measured based on the input rotational speed of 3000 rpm, i=10.

Any product models and parameters in this sample are subject to change without prior notice. Please confirm with the company before ordering.

TB090 Series

TB090 One Stage

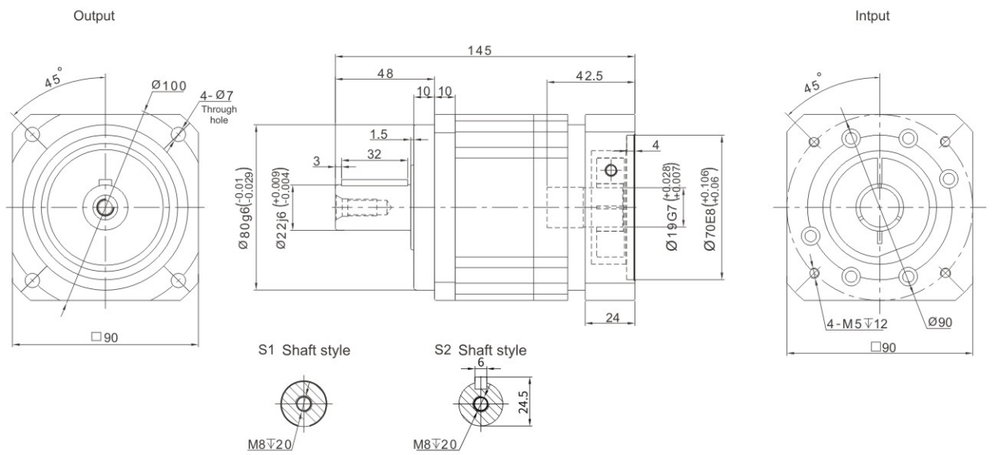

TB090 Two Stage

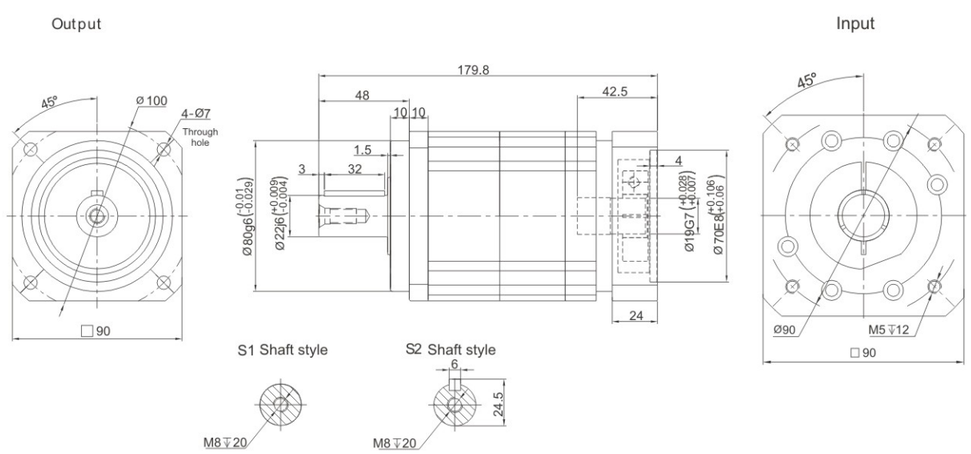

Performance Data

The TB series reducer adopts a standardized flange interface. The installation is convenient and quick. Due to its integral structure design, this high-precision model can operate excellently in many demanding working application.

TB090			One Stage																		
Speed Ratio		i	3	4	5	6	7	8	9	10	15	20	25	30	35	40	50	60	70	80	100
Norminal Output Torque	T_1	Nm	130	140	160	150	140	120	-	100	130	140	160	150	140	120	160	150	140	120	100
Emergency Stop Torque	T_2	Nm	$T_1 \times 3$																		
Norminal Input Speed	S_1	rpm	4000																		
Maximum Input Speed	S_2	rpm	8000																		
Maximum Output Torque	T_4	Nm	$T_1 \times 3 \times 60\%$																		
Maximum Radial Force	F_a	N	3250																		
Maximum Axial Force	F_b	N	1625																		
Torsional Rigidity	-	Nm/arcmin	14																		
Effciency	η	%	⩾97																		
Service Life	–	h	20000																		
Noise	–	dB	⩽60																		
Weight	–	Kg	3.6																		
Backlash	P0	arcmin	⩽1																		
	P1		⩽3																		
	P2		⩽5																		
Operating Temperature	–	℃	-20~90																		
Lubrication	–		Synthetic Grease																		
Protection Class	–		IP65																		
Mounting Position	–		Any Direaction																		
Moment of Inertia	J	kg.cm²	0.61	0.48	0.47	0.45		0.44			0.47							0.44			

Notes:

- Speed ratio (i=Sin/Sout)
- When the output speed is 100 rpm, it acts on the center of the output shaft.
- For continous operation, the service life is no lessthan 10,000 hours.
- The noise value was measured based on the input rotational speed of 3000 rpm, i=10.

Any product models and parameters in this sample are subject to change without prior notice. Please confirm with the company before ordering.

TB115 Series

TB115 One Stage

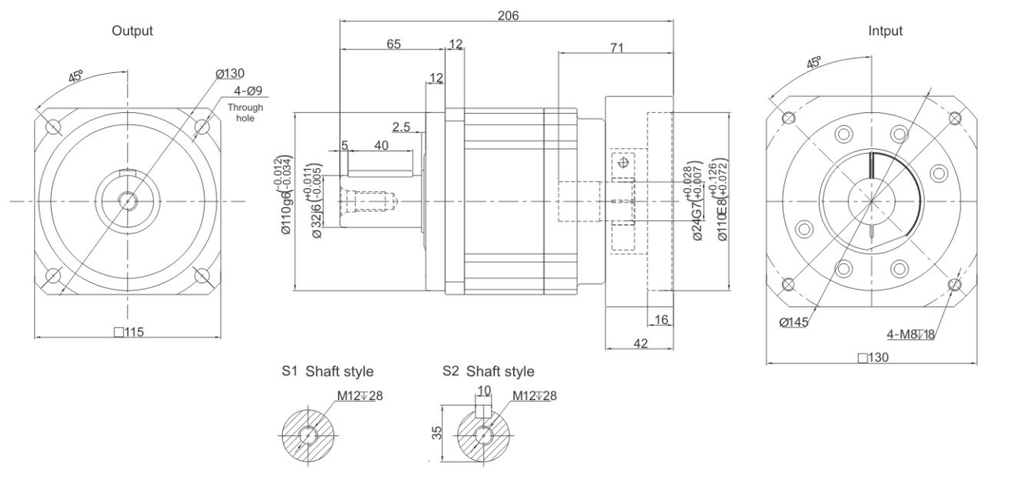

TB115 Two Stage

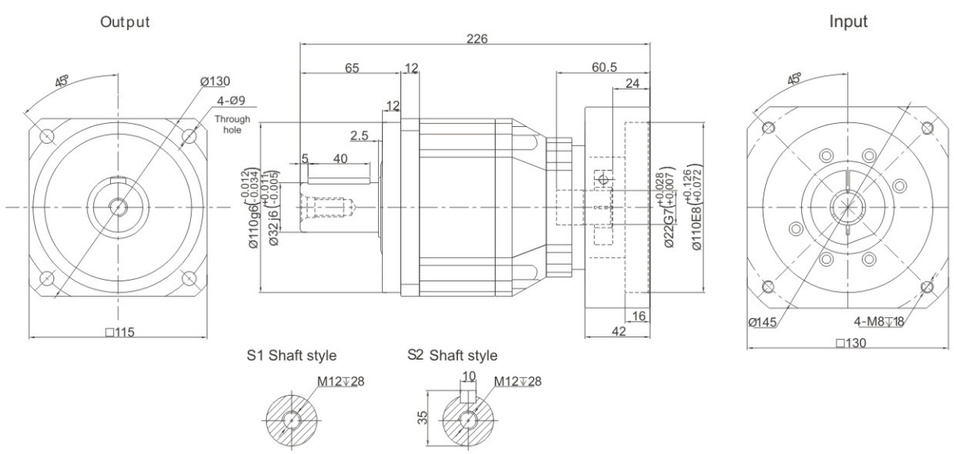

Performance Data

The TB series reducer adopts a standardized flange interface. The installation is convenient and quick. Due to its integral structure design, this high-precision model can operate excellently in many demanding working application.

TB115			One Stage									Two Stage									
Speed Ratio		i	3	4	5	6	7	8	9	10	15	20	25	30	35	40	50	60	70	80	100
Norminal Output Torque	T_1	Nm	208	290	330	310	300	260	-	230	208	290	330	310	300	260	330	310	300	260	230
Emergency Stop Torque	T_2	Nm	$T_1 \times 3$									$T_1 \times 3$									
Norminal Input Speed	S_1	rpm	4000									4000									
Maximum Input Speed	S_2	rpm	8000									8000									
Maximum Output Torque	T_4	Nm	$T_1 \times 3 \times 60\%$									$T_1 \times 3 \times 60\%$									
Maximum Radial Force	F_a	N	6700									6700									
Maximum Axial Force	F_b	N	3350									3350									
Torsional Rigidity	-	Nm/arcmin	25									25									
Effciency	η	%	⩾97									⩾94									
Service Life	–	h	20000									20000									
Noise	–	dB	⩽63									⩽63									
Weight	–	Kg	7.7									9									
Backlash	P0	arcmin	⩽1									⩽3									
	P1		⩽3									⩽5									
	P2		⩽5									⩽7									
Operating Temperature	–	℃	-20~90									-20~90									
Lubrication	–		Synthetic Grease									Synthetic Grease									
Protection Class	–		IP65									IP65									
Mounting Position	–		Any Direaction									Any Direaction									
Moment of Inertia	J	kg.cm²	3.25	2.74	2.71	2.65	2.62	2.58	–	2.57		0.47						0.44			

Notes:

- Speed ratio (i=Sin/Sout)
- When the output speed is 100 rpm, it acts on the center of the output shaft.
- For continous operation, the service life is no lessthan 10,000 hours.
- The noise value was measured based on the input rotational speed of 3000 rpm, i=10.

Any product models and parameters in this sample are subject to change without prior notice. Please confirm with the company before ordering.

TB142 Series

TB142 One Stage

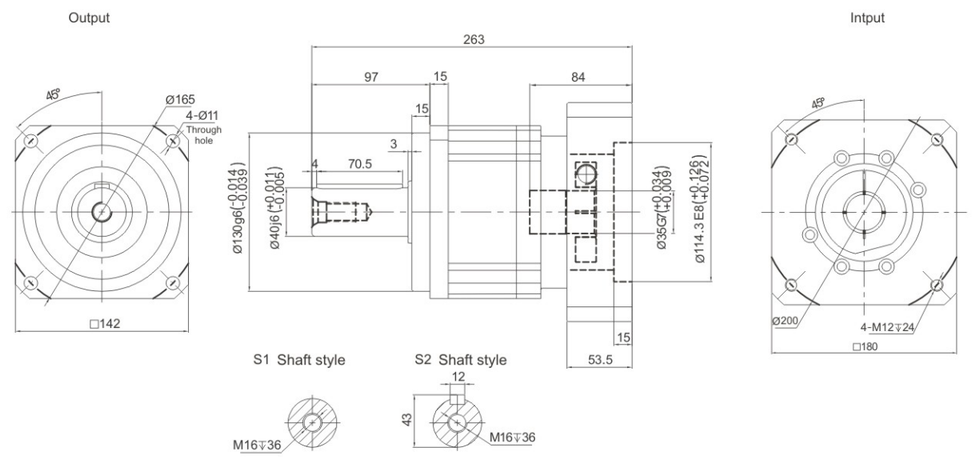

TB142 Two Stage

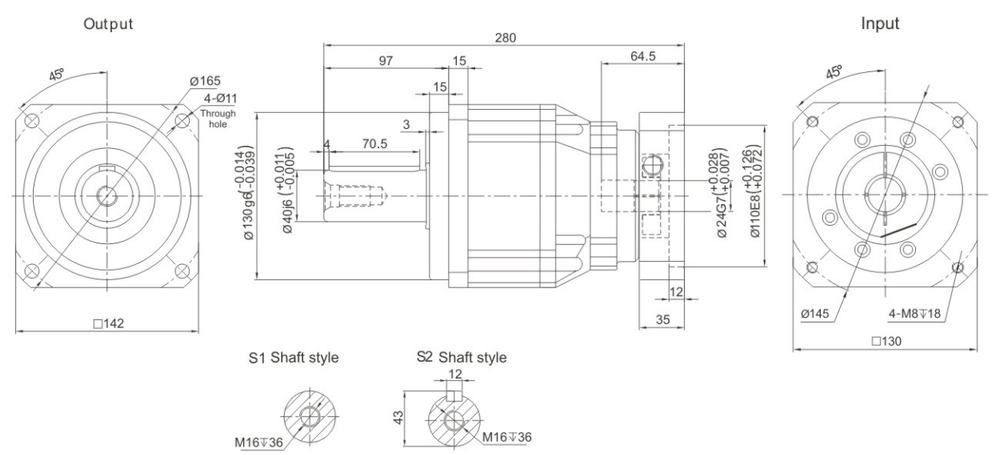

Performance Data

The TB series reducer adopts a standardized flange interface. The installation is convenient and quick. Due to its integral structure design, this high-precision model can operate excellently in many demanding working application.

TB142			One Stage								Two Stage										
Speed Ratio		i	3	4	5	6	7	8	9	10	15	20	25	30	35	40	50	60	70	80	100
Norminal Output Torque	T_1	Nm	342	542	650	600	550	500	-	450	342	542	650	600	550	500	650	600	550	500	450
Emergency Stop Torque	T_2	Nm	$T_1 \times 3$								$T_1 \times 3$										
Norminal Input Speed	S_1	rpm	3000								3000										
Maximum Input Speed	S_2	rpm	6000								6000										
Maximum Output Torque	T_4	Nm	$T_1 \times 3 \times 60\%$								$T_1 \times 3 \times 60\%$										
Maximum Radial Force	F_a	N	9400								9400										
Maximum Axial Force	F_b	N	4700								4700										
Torsional Rigidity	-	Nm/arcmin	50								50										
Effciency	η	%	≥97								≥94										
Service Life	–	h	20000								20000										
Noise	–	dB	≤65								≤65										
Weight	–	Kg	14.5								17.5										
Backlash	P0	arcmin	≤1								≤3										
	P1		≤3								≤5										
	P2		≤5								≤10										
Operating Temperature	–	℃	-20~90								-20~90										
Lubrication	–		Synthetic Grease								Synthetic Grease										
Protection Class	–		IP65								IP65										
Mounting Position	–		Any Direaction								Any Direaction										
Moment of Inertia	J	kg.cm²	9.21	7.54	7.42	7.25	7.14	7.07	–	7.03	2.71						2.57				

Notes:

- Speed ratio (i=Sin/Sout)
- When the output speed is 100 rpm, it acts on the center of the output shaft.
- For continous operation, the service life is no lessthan 10,000 hours.
- The noise value was measured based on the input rotational speed of 3000 rpm, i=10.

Any product models and parameters in this sample are subject to change without prior notice. Please confirm with the company before ordering.

TB180 Series

TB180 One Stage

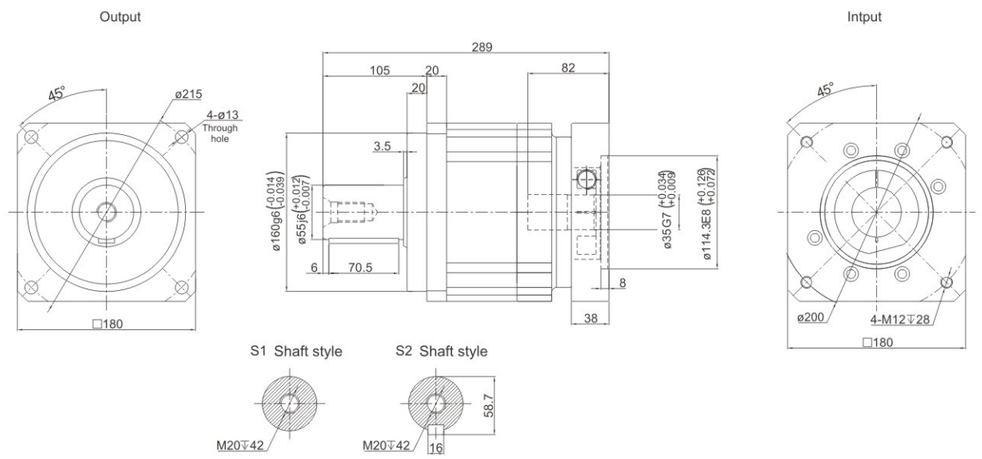

TB180 Two Stage

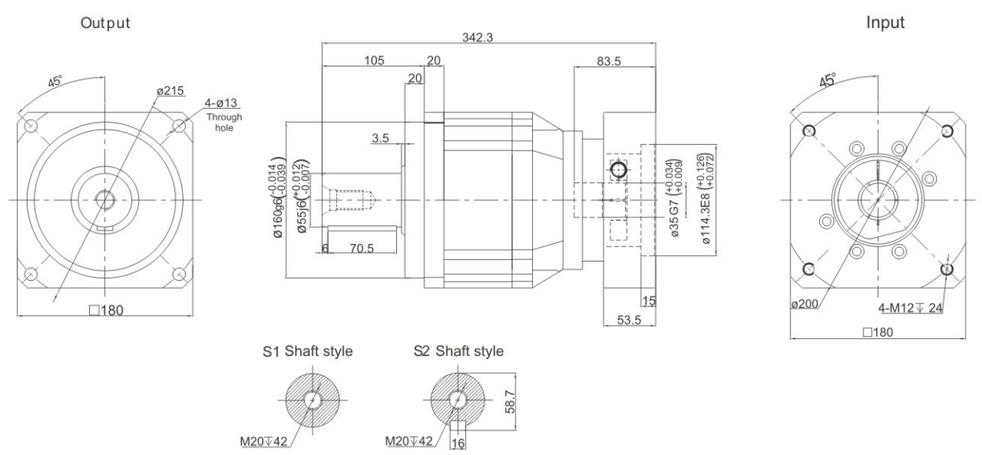

Performance Data

The TB series reducer adopts a standardized flange interface. The installation is convenient and quick. Due to its integral structure design, this high-precision model can operate excellently in many demanding working application.

TB180			One Stage								Two Stage										
Speed Ratio		i	3	4	5	6	7	8	9	10	15	20	25	30	35	40	50	60	70	80	100
Norminal Output Torque	T_1	Nm	588	1050	1200	1100	1100	1000	-	900	588	1050	1200	1100	1100	1000	1200	1100	1100	1000	900
Emergency Stop Torque	T_2	Nm	$T_1 \times 3$								$T_1 \times 3$										
Norminal Input Speed	S_1	rpm	3000								3000										
Maximum Input Speed	S_2	rpm	6000								6000										
Maximum Output Torque	T_4	Nm	$T_1 \times 3 \times 60\%$								$T_1 \times 3 \times 60\%$										
Maximum Radial Force	F_a	N	14500								14500										
Maximum Axial Force	F_b	N	7250								7250										
Torsional Rigidity	-	Nm/arcmin	145								145										
Effciency	η	%	≥97								≥94										
Service Life	–	h	20000								20000										
Noise	–	dB	≤66								≤66										
Weight	–	Kg	29								33										
Backlash	P0	arcmin	≤1								≤3										
	P1		≤3								≤5										
	P2		≤5								≤7										
Operating Temperature	–	℃	-20~90								-20~90										
Lubrication	–		Synthetic Grease								Synthetic Grease										
Protection Class	–		IP65								IP65										
Mounting Position	–		Any Direaction								Any Direaction										
Moment of Inertia	J	kg.cm²	28.98	23.67	23.29	22.75	22.48	22.59	–	22.51	7.42						7.03				

Notes:

- Speed ratio (i=Sin/Sout)
- When the output speed is 100 rpm, it acts on the center of the output shaft.
- For continous operation, the service life is no lessthan 10,000 hours.
- The noise value was measured based on the input rotational speed of 3000 rpm, i=10.

Any product models and parameters in this sample are subject to change without prior notice. Please confirm with the company before ordering.

TB220 Series

TB220 One Stage

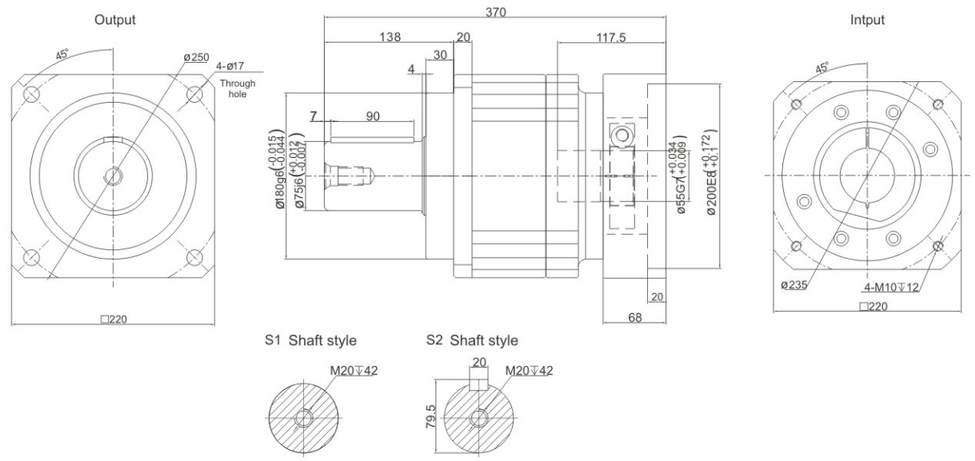

TB220 Two Stage

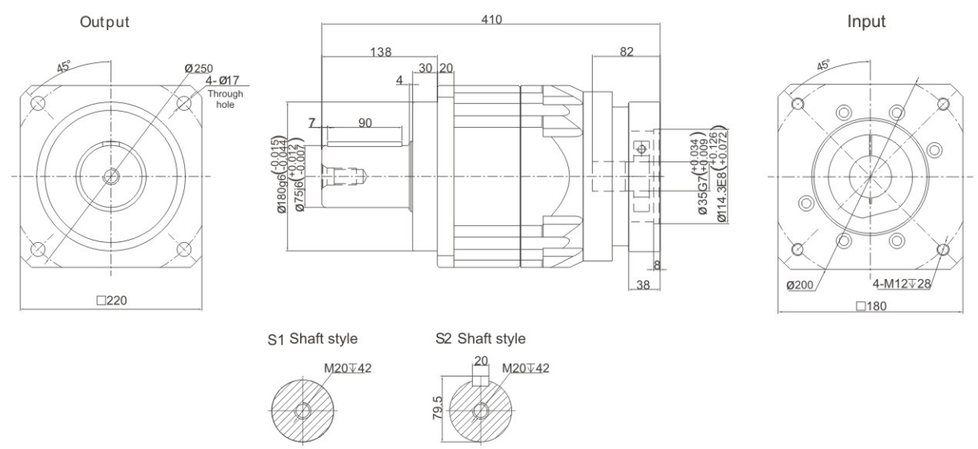

Performance Data

The TB series reducer adopts a standardized flange interface. The installation is convenient and quick. Due to its integral structure design, this high-precision model can operate excellently in many demanding working application.

TB220			One Stage																		
Speed Ratio		i	3	4	5	6	7	8	9	10	15	20	25	30	35	40	50	60	70	80	100
Norminal Output Torque	T_1	Nm	1140	1700	2000	1900	1800	1600	-	1500	1140	1700	2000	1900	1800	1600	2000	1900	1800	1600	1500
Emergency Stop Torque	T_2	Nm	$T_1 \times 3$																		
Norminal Input Speed	S_1	rpm	2000																		
Maximum Input Speed	S_2	rpm	4000																		
Maximum Output Torque	T_4	Nm	$T_1 \times 3 \times 60\%$																		
Maximum Radial Force	F_a	N	50000																		
Maximum Axial Force	F_b	N	25000																		
Torsional Rigidity	–	Nm/arcmin	225																		
Efficiency	η	%	≥97																		
Service Life	–	h	20000																		
Noise	–	dB	≤70																		
Weight	–	Kg	48																		
Backlash	P0	arcmin	≤1																		
	P1		≤3																		
	P2		≤5																		
Operating Temperature	–	℃	-20~90																		
Lubrication	–		Synthetic Grease																		
Protection Class	–		IP65																		
Mounting Position	–		Any Direaction																		
Moment of Inertia	J	kg.cm²	69.61	54.37	53.27	51.72	50.97	50.84	–	50.56	23.29									22.51	

Notes:

- Speed ratio (i=Sin/Sout)
- When the output speed is 100 rpm, it acts on the center of the output shaft.
- For continous operation, the service life is no lessthan 10,000 hours.
- The noise value was measured based on the input rotational speed of 3000 rpm, i=10.

Any product models and parameters in this sample are subject to change without prior notice. Please confirm with the company before ordering.

TBR042 Series

TBR042 One Stage

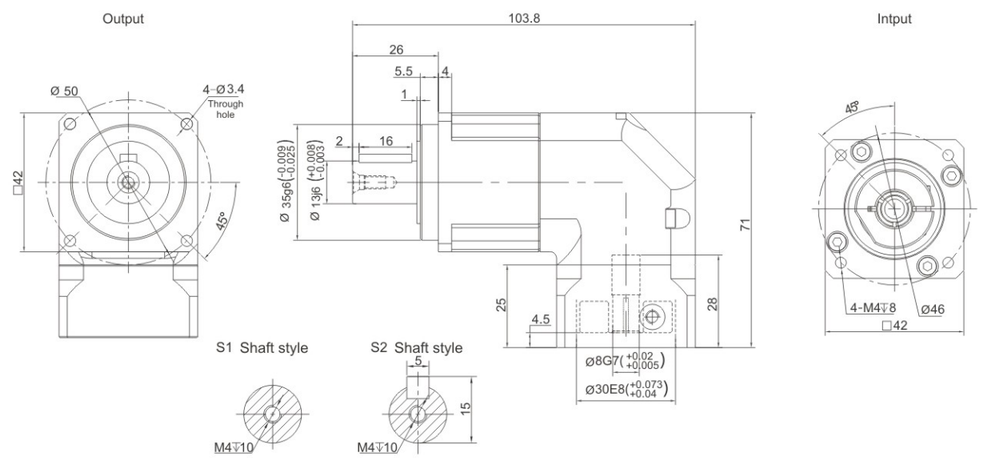

TBR042 Two Stage

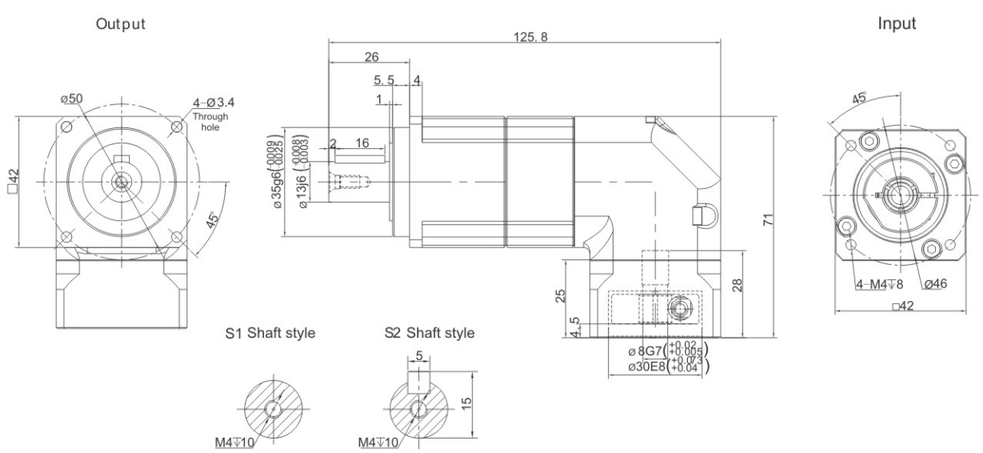

Performance Data

The TBR series reducer adopts a standardized flange interface. The installation is convenient and quick. Due to its integral structure design, this high-precision model can operate excellently in many demanding working application.

TBR042			One Stage																																		
Speed Ratio	i		–	4	5	6	7	8	9	10	12	14	16	20	25	30	35	40	50	60	70	80	100	120	140	160	180	200									
Norminal Output Torque	T_1	Nm	–	12	15	18	19	17	–	14	18	–	17	14	15	20	19	17	14	20	19	17	14	–	–	–	–	–									
Emergency Stop Torque	T_2	Nm	$T_1 \times 3$																	$T_1 \times 3$																	
Norminal Input Speed	S_1	rpm	5000																	5000																	
Maximum Input Speed	S_2	rpm	10000																	10000																	
Maximum Output Torque	T_4	Nm	$T_1 \times 3 \times 60\%$																	$T_1 \times 3 \times 60\%$																	
Maximum Radial Force	F_a	N	780																	780																	
Maximum Axial Force	F_b	N	390																	390																	
Torsional Rigidity	–	Nm/arcmin	3																	3																	
Effciency	η	%	⩾95																	⩾92																	
Service Life	–	h	20000																	20000																	
Noise	–	dB	⩽61																	⩽61																	
Weight	–	Kg	0.9																	1.1																	
Backlash	P0	arcmin	–																	–																	
	P1		⩽4																	⩽7																	
	P2		⩽6																	⩽9																	
Operating Temperature	–	℃	-20~90																	-20~90																	
Lubrication	–		Synthetic Grease																	Synthetic Grease																	
Protection Class	–		IP65																	IP65																	
Mounting Position	–		Any Direaction																	Any Direaction																	
Moment of Inertia	J	$kg.cm^2$	0.09																	0.09																	

Notes:

- Speed ratio (i=Sin/Sout)
- When the output speed is 100 rpm, it acts on the center of the output shaft.
- For continous operation, the service life is no lessthan 10,000 hours.
- The noise value was measured based on the input rotational speed of 3000 rpm, i=10.

Any product models and parameters in this sample are subject to change without prior notice. Please confirm with the company before ordering.

TBR Series - High Speed and Precision

TBR060 Series

TBR060 One Stage

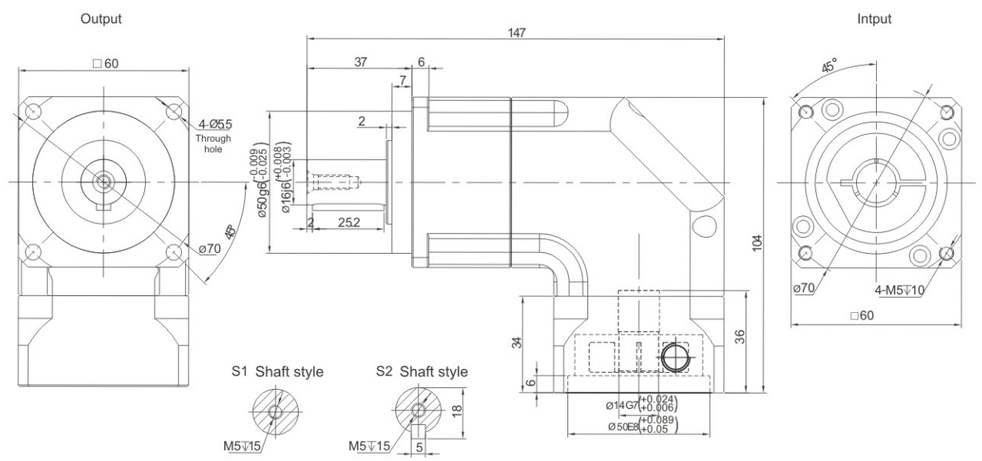

TBR060 Two Stage

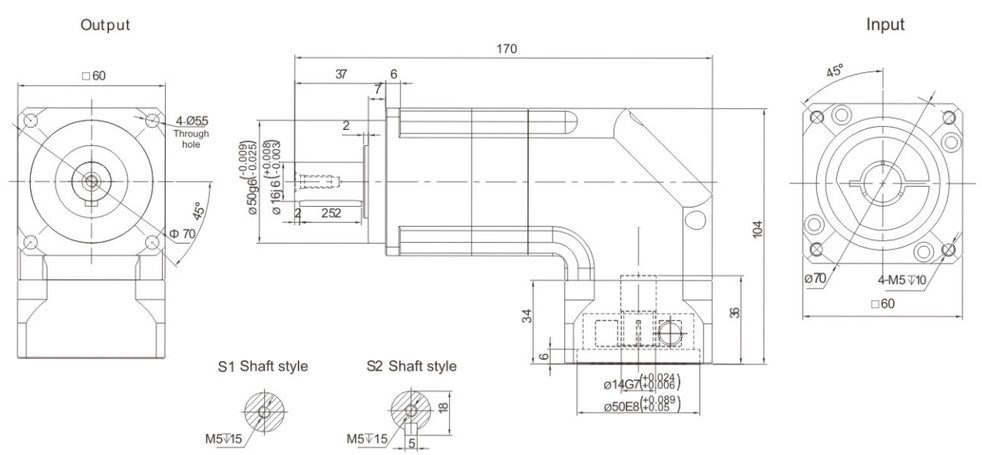

Performance Data

The TBR series reducer adopts a standardized flange interface. The installation is convenient and quick. Due to its integral structure design, this high-precision model can operate excellently in many demanding working application.

TBR060			One Stage												Two Stage													
Speed Ratio	i		3	4	5	6	7	8	9	10	12	14	16	20	25	30	35	40	50	60	70	80	100	120	140	160	180	200
Norminal Output Torque	T_1	Nm	36	48	60	55	50	45	-	40	55	42	45	40	60	55	50	45	60	55	50	45	40	55	50	45	-	40
Emergency Stop Torque	T_2	Nm	$T_1 \times 3$												$T_1 \times 3$													
Norminal Input Speed	S_1	rpm	5000												5000													
Maximum Input Speed	S_2	rpm	10000												10000													
Maximum Output Torque	T_4	Nm	$T_1 \times 3 \times 60\%$												$T_1 \times 3 \times 60\%$													
Maximum Radial Force	F_a	N	1530												1530													
Maximum Axial Force	F_b	N	765												765													
Torsional Rigidity	–	Nm/arcmin	7												7													
Effciency	η	%	⩾95												⩾92													
Service Life	–	h	20000												20000													
Noise	–	dB	⩽63												⩽63													
Weight	–	Kg	1.5												2.1													
Backlash	P0	arcmin	-												-													
	P1		⩽4												⩽7													
	P2		⩽6												⩽9													
Operating Temperature	–	℃	-20~90												-20~90													
Lubrication	–		Synthetic Grease												Synthetic Grease													
Protection Class	–		IP65												IP65													
Mounting Position	–		Any Direaction												Any Direaction													
Moment of Inertia	J	kg.cm²	0.35							0.07					0.09													

Notes:

- Speed ratio (i=Sin/Sout)
- When the output speed is 100 rpm, it acts on the center of the output shaft.
- For continous operation, the service life is no lessthan 10,000 hours.
- The noise value was measured based on the input rotational speed of 3000 rpm, i=10.

Any product models and parameters in this sample are subject to change without prior notice. Please confirm with the company before ordering.

TBR Series - High Speed and Precision

TBR090 Series

TBR090 One Stage

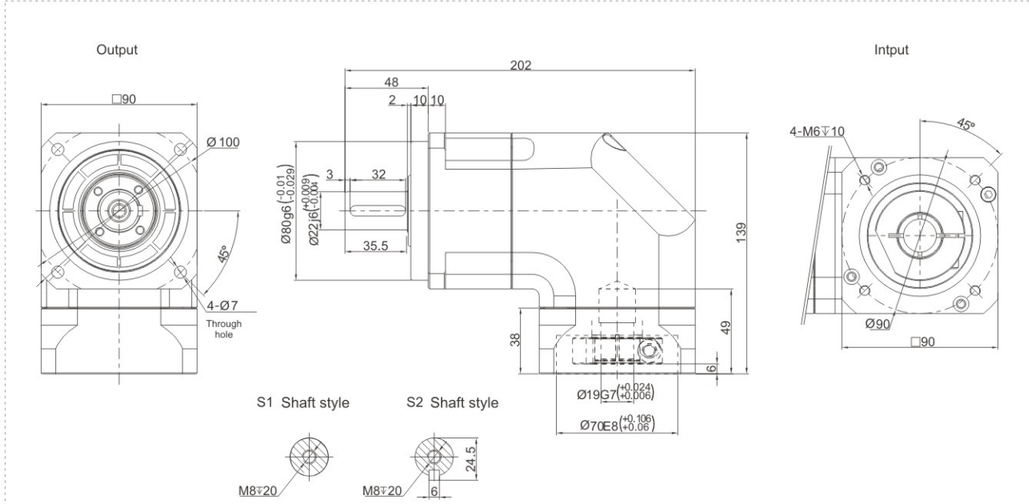

TBR090 Two Stage

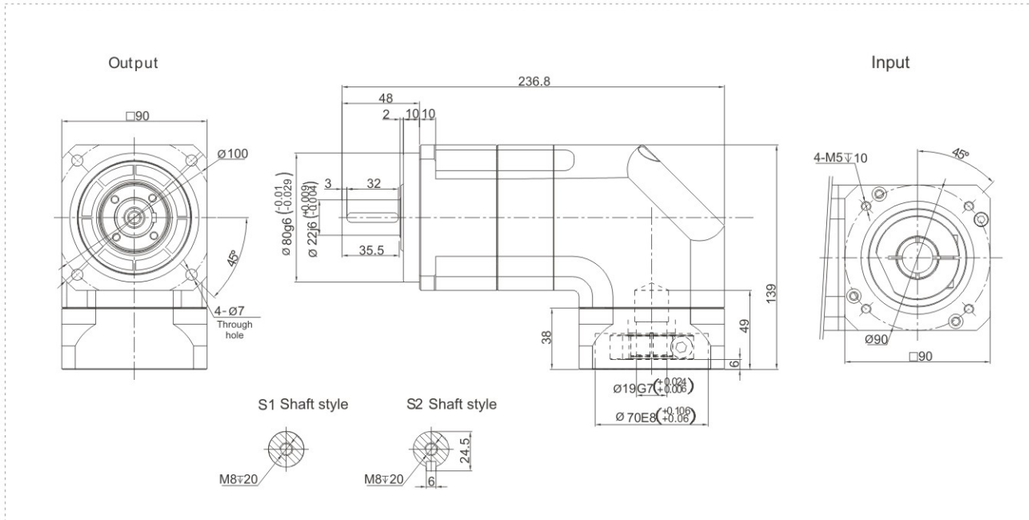

Performance Data

The TBR series reducer adopts a standardized flange interface. The installation is convenient and quick. Due to its integral structure design, this high-precision model can operate excellently in many demanding working application.

TBR090			One Stage												Two Stage													
Speed Ratio	i		3	4	5	6	7	8	9	10	12	14	16	20	25	30	35	40	50	60	70	80	100	120	140	160	180	200
Norminal Output Torque	T_1	Nm	90	120	150	150	140	120	-	100	150	140	120	100	150	150	140	120	100	150	140	120	100	150	140	120	-	100
Emergency Stop Torque	T_2	Nm	$T_1 \times 3$												$T_1 \times 3$													
Norminal Input Speed	S_1	rpm	4000												4000													
Maximum Input Speed	S_2	rpm	8000												8000													
Maximum Output Torque	T_4	Nm	$T_1 \times 3 \times 60\%$												$T_1 \times 3 \times 60\%$													
Maximum Radial Force	F_a	N	3250												3250													
Maximum Axial Force	F_b	N	1625												1625													
Torsional Rigidity	–	Nm/arcmin	14												14													
Effciency	η	%	⩾95												⩾92													
Service Life	–	h	20000												20000													
Noise	–	dB	⩽65												⩽65													
Weight	–	Kg	6.4												7.7													
Backlash	P0	arcmin	⩽2												⩽4													
	P1		⩽4												⩽7													
	P2		⩽6												⩽9													
Operating Temperature	–	℃	-20~90												-20~90													
Lubrication	–		Synthetic Grease												Synthetic Grease													
Protection Class	–		IP65												IP65													
Mounting Position	–		Any Direaction												Any Direaction													
Moment of Inertia	J	kg.cm²	2.25							1.87					0.35													0.31

Notes:

- Speed ratio (i=Sin/Sout)
- When the output speed is 100 rpm, it acts on the center of the output shaft.
- For continous operation, the service life is no lessthan 10,000 hours.
- The noise value was measured based on the input rotational speed of 3000 rpm, i=10.

Any product models and parameters in this sample are subject to change without prior notice. Please confirm with the company before ordering.

TBR Series - High Speed and Precision

TBR115 Series

TBR115 One Stage

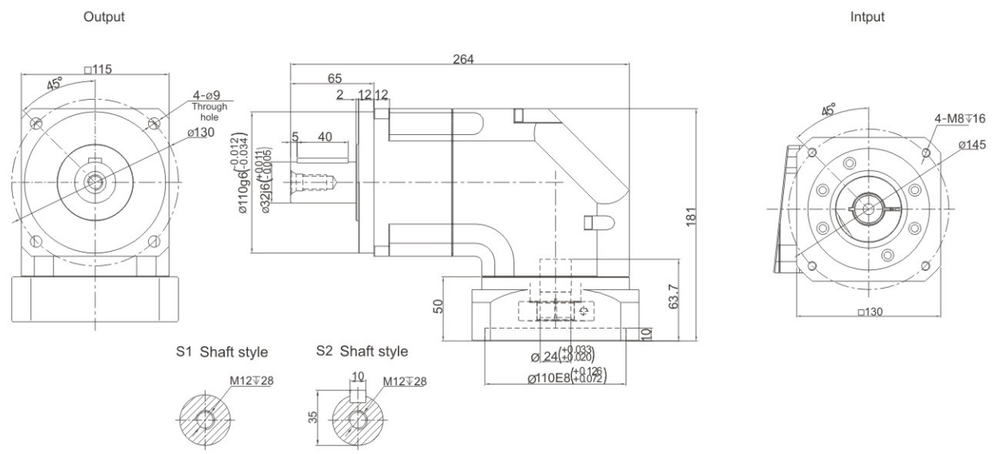

TBR115 Two Stage

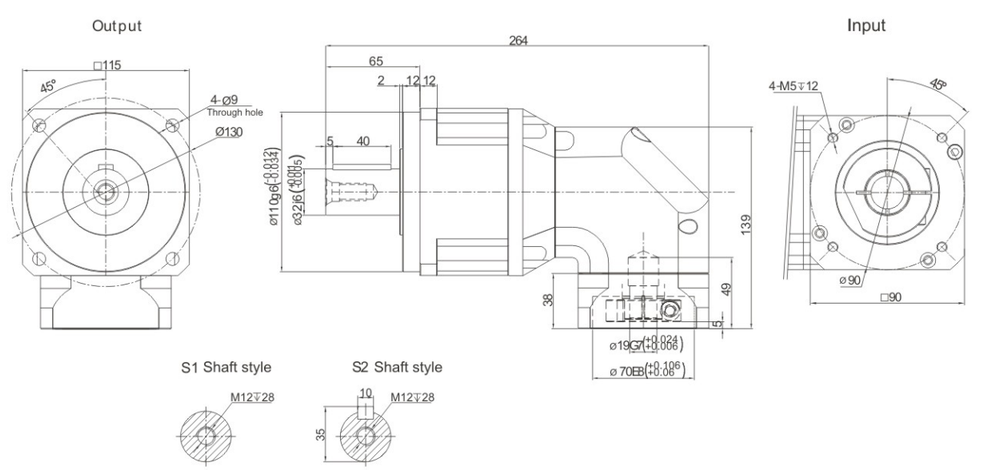

Performance Data

The TBR series reducer adopts a standardized flange interface. The installation is convenient and quick. Due to its integral structure design, this high-precision model can operate excellently in many demanding working application.

TBR115			One Stage																													
Speed Ratio	i		3	4	5	6	7	8	9	10	12	14	16	20	25	30	35	40	50	60	70	80	100	120	140	160	180	200				
Norminal Output Torque	T_1	Nm	195	260	325	310	300	260	-	230	310	300	260	230	325	310	300	260	230	310	300	260	230	310	300	260	-	230				
Emergency Stop Torque	T_2	Nm	$T_1 \times 3$																													
Norminal Input Speed	S_1	rpm	4000																													
Maximum Input Speed	S_2	rpm	8000																													
Maximum Output Torque	T_4	Nm	$T_1 \times 3 \times 60\%$																													
Maximum Radial Force	F_a	N	6700																													
Maximum Axial Force	F_b	N	3350																													
Torsional Rigidity	–	Nm/arcmin	25																													
Effciency	η	%	⩾95																													
Service Life	–	h	20000																													
Noise	–	dB	⩽68																													
Weight	–	Kg	13																													
Backlash	P0	arcmin	⩽2																													
	P1		⩽4																													
	P2		⩽6																													
Operating Temperature	–	℃	-20~90																													
Lubrication	–		Synthetic Grease																													
Protection Class	–		IP65																													
Mounting Position	–		Any Direaction																													
Moment of Inertia	J	kg.cm²	6.84							6.25					2.25								1.87									

Notes:

- Speed ratio (i=Sin/Sout)
- When the output speed is 100 rpm, it acts on the center of the output shaft.
- For continous operation, the service life is no lessthan 10,000 hours.
- The noise value was measured based on the input rotational speed of 3000 rpm, i=10.

Any product models and parameters in this sample are subject to change without prior notice. Please confirm with the company before ordering.

TBR142 Series

TBR142 One Stage

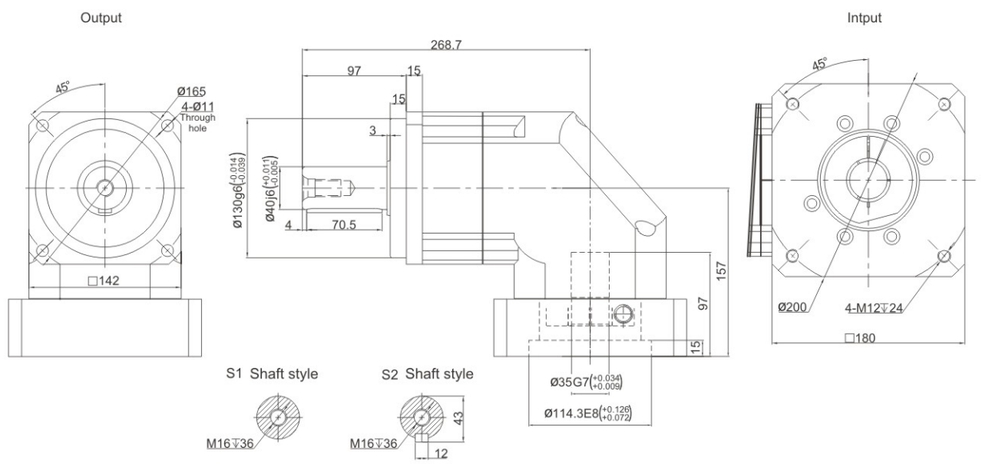

TBR142 Two Stage

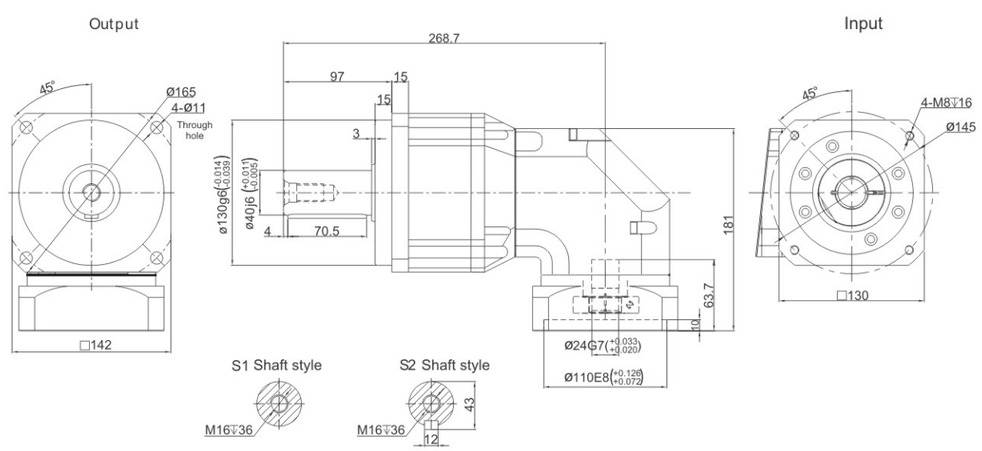

Performance Data

The TBR series reducer adopts a standardized flange interface. The installation is convenient and quick. Due to its integral structure design, this high-precision model can operate excellently in many demanding working application.

| TBR142 | | | One Stage | | |

TBR Series - High Speed and Precision

TBR180 Series

TBR180 One Stage

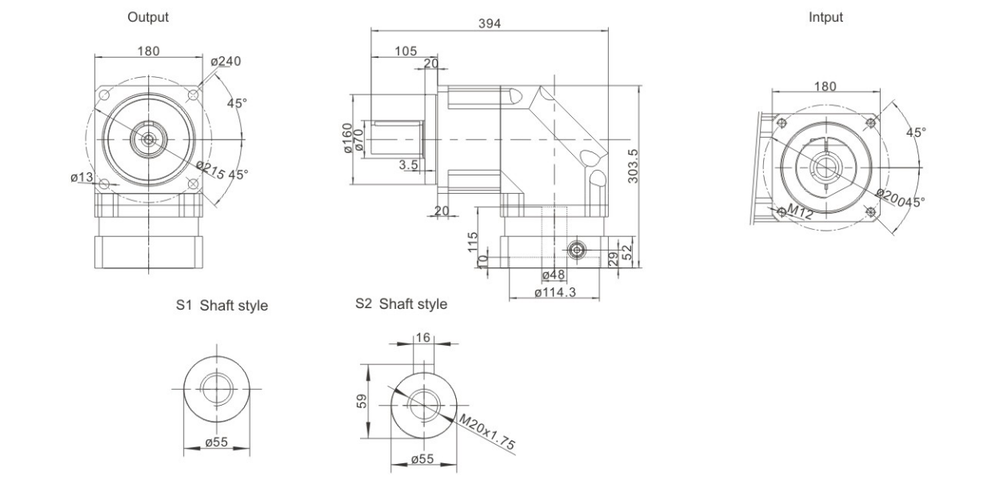

TBR180 Two Stage

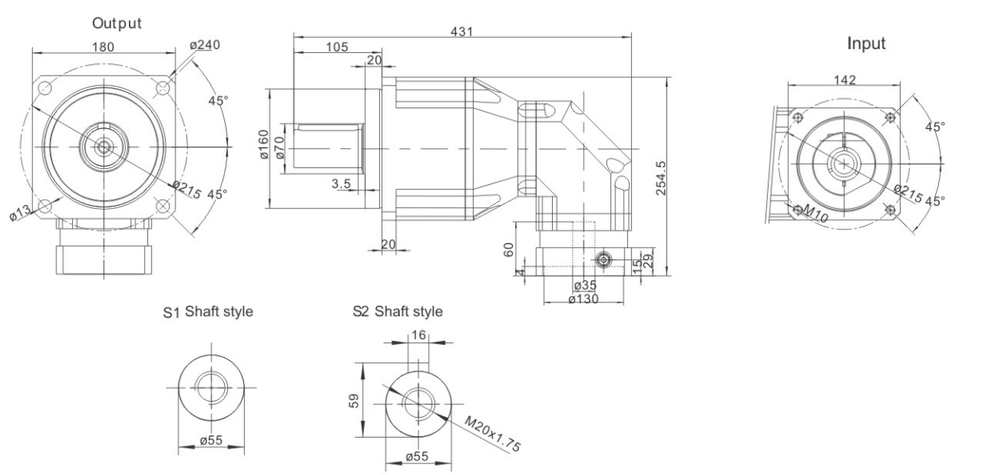

Performance Data

The TBR series reducer adopts a standardized flange interface. The installation is convenient and quick. Due to its integral structure design, this high-precision model can operate excellently in many demanding working application.

TBR180			One Stage																																					
Speed Ratio	i		3	4	5	6	7	8	9	10	12	14	16	20	25	30	35	40	50	60	70	80	100	120	140	160	180	200												
Norminal Output Torque	T_1	Nm	588	1040	1200	1100	1100	1000	-	900	1100	1100	1000	900	1200	1100	1100	1000	1200	1100	1100	1000	900	1100	1100	1000	-	900												
Emergency Stop Torque	T_2	Nm	$T_1 \times 3$												$T_1 \times 3$																									
Norminal Input Speed	S_1	rpm	3000												3000																									
Maximum Input Speed	S_2	rpm	6000												6000																									
Maximum Output Torque	T_4	Nm	$T_1 \times 3 \times 60\%$												$T_1 \times 3 \times 60\%$																									
Maximum Radial Force	F_a	N	14500												14500																									
Maximum Axial Force	F_b	N	7250												7250																									
Torsional Rigidity	–	Nm/arcmin	145												145																									
Effciency	η	%	⩾95												⩾92																									
Service Life	–	h	20000												20000																									
Noise	–	dB	⩽72												⩽72																									
Weight	–	Kg	51												54																									
Backlash	P0	arcmin	⩽2												⩽4																									
	P1		⩽4												⩽7																									
	P2		⩽6												⩽9																									
Operating Temperature	–	℃	-20~90												-20~90																									
Lubrication	–		Synthetic Grease												Synthetic Grease																									
Protection Class	–		IP65												IP65																									
Mounting Position	–		Any Direaction												Any Direaction																									
Moment of Inertia	J	kg.cm²	68.9						65.6						23.4								21.8																	

Notes:

- Speed ratio (i=Sin/Sout)
- When the output speed is 100 rpm, it acts on the center of the output shaft.
- For continous operation, the service life is no lessthan 10,000 hours.
- The noise value was measured based on the input rotational speed of 3000 rpm, i=10.

Any product models and parameters in this sample are subject to change without prior notice. Please confirm with the company before ordering.

Precision Planetary Reducer

Enhanced Load Bearing Capacity

+

TD/TDR SERIES

+

Low Vibration & Noise

TD/TDR series planetary reducer offers you innovative and advanced solutions in terms of technology, which has achieved outstanding results in any flange-driven applications.

GEARKO

DRIVES THE PRECISION

TD Series - Smooth and Reliable

TD064 Series

TD064 One Stage

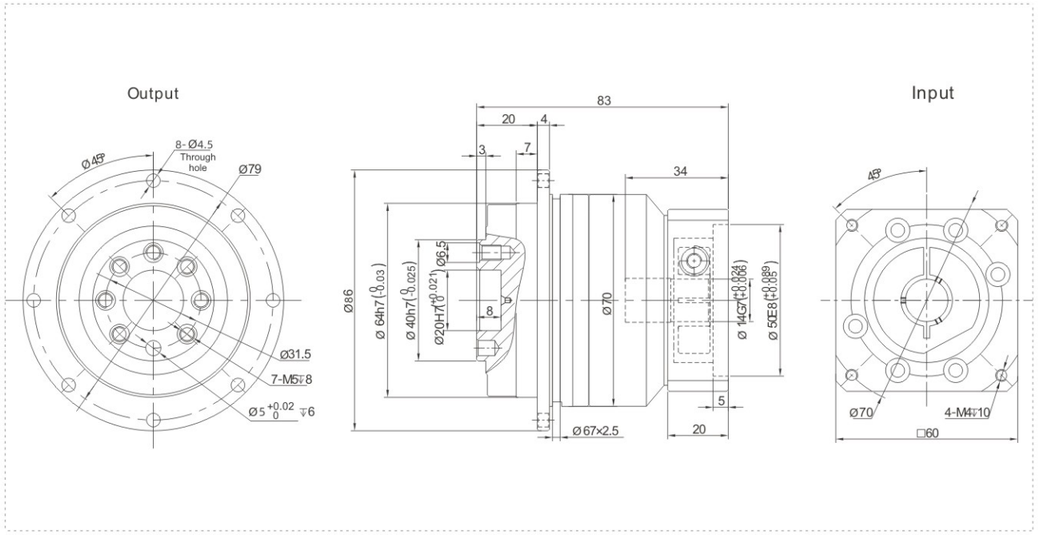

TD064 Two Stage

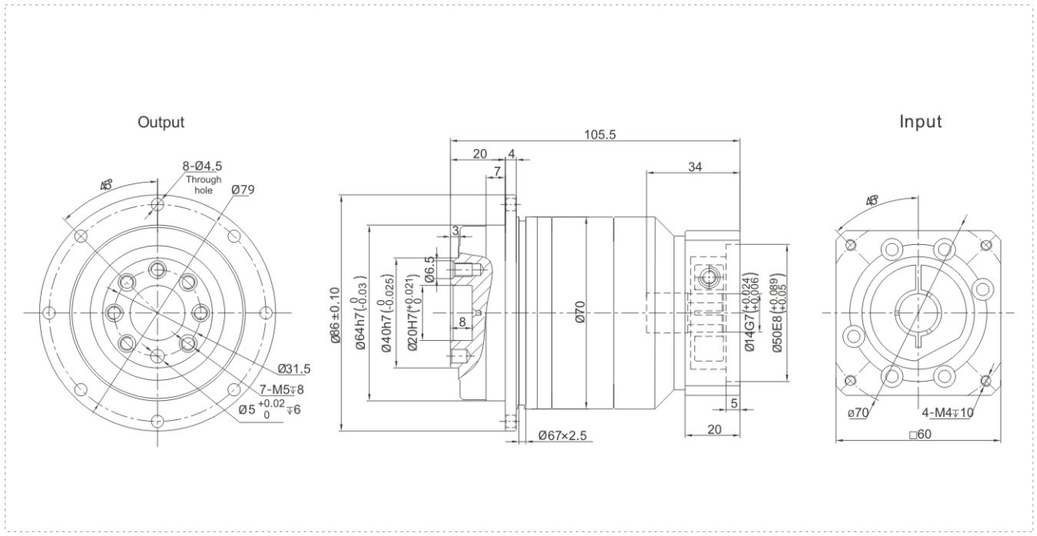

Performance Data

TD series reducer offers quiet operation with high axial load and tilt moment. High quality and capacity load bearing ensures smooth operation for any flange-operated applications.

TD064			One Stage				Two Stage						
Speed Ratio		i	4	5	7	10	20	25	35	40	50	70	100
Norminal Output Torque	T_1	Nm	48	60	50	40	48	60	50	48	60	50	40
Emergency Stop Torque	T_2	Nm	$T_1 \times 3$				$T_1 \times 3$						
Norminal Input Speed	S_1	rpm	5000				5000						
Maximum Input Speed	S_2	rpm	10000				10000						
Maximum Output Torque	T_4	Nm	$T_1 \times 3 \times 60\%$				$T_1 \times 3 \times 60\%$						
Maximum Bending Moment	M_a	Nm	125				125						
Maximum Axial Force	F_b	N	1050				1050						
Torsional Rigidity	–	Nm/arcmin	13				13						
Efficiency	η	%	⩾97				⩾94						
Service Life	–	h	30000				30000						
Noise	–	dB	⩽58				⩽58						
Weight	–	Kg	1.2				1.6						
Backlash	P0	arcmin	⩽1				⩽3						
	P1		⩽3				⩽5						
	P2		⩽5				⩽7						
Operating Temperature	–	℃	-20~90				-20~90						
Lubrication	–		Synthetic Grease				Synthetic Grease						
Protection Class	–		IP65				IP65						
Mounting Position	–		Any Direction				Any Direction						
Moment of Inertia	J	$kg.cm^2$	0.14	0.13			0.03						

Notes:

- Speed ratio (i=Sin/Sout)
- When the output speed is 100 rpm, it acts on the center of the output shaft.
- For continous operation, the service life is no lessthan 10,000 hours.
- The noise value was measured based on the input rotational speed of 3000 rpm, i=10.

Any product models and parameters in this sample are subject to change without prior notice. Please confirm with the company before ordering.

TD Series - Smooth and Reliable

TD090 Series

TD090 One Stage

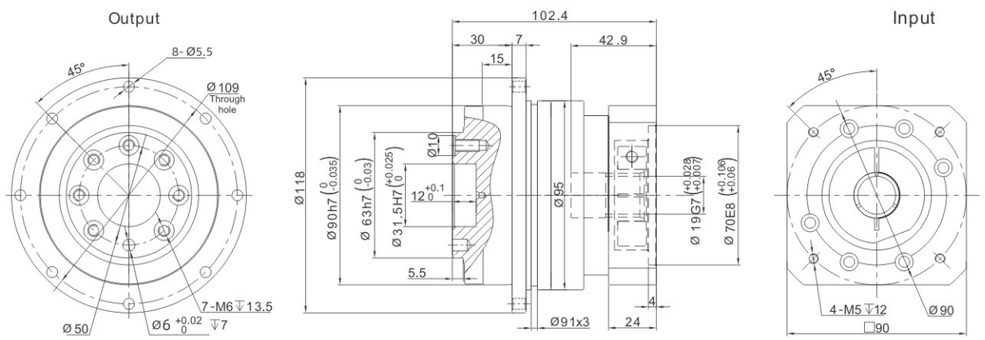

TD090 Two Stage

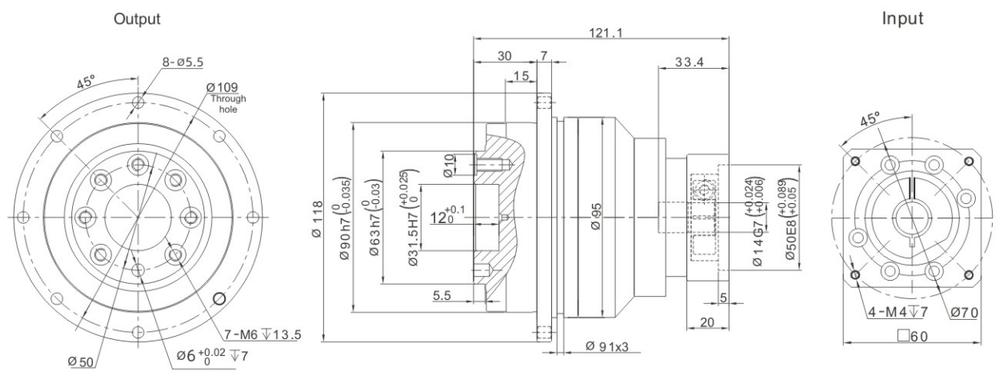

Performance Data

TD series reducer offers quiet operation with high axial load and tilt moment. High quality and capacity load bearing ensures smooth operation for any flange-operated applications.

TD090			One Stage				Two Stage						
Speed Ratio	i		4	5	7	10	20	25	35	40	50	70	100
Norminal Output Torque	T_1	Nm	130	160	140	100	130	160	140	130	160	140	100
Emergency Stop Torque	T_2	Nm	$T_1 \times 3$				$T_1 \times 3$						
Norminal Input Speed	S_1	rpm	4000				4000						
Maximum Input Speed	S_2	rpm	8000				8000						
Maximum Output Torque	T_4	Nm	$T_1 \times 3 \times 60\%$				$T_1 \times 3 \times 60\%$						
Maximum Bending Moment	M_a	Nm	235				235						
Maximum Axial Force	F_b	N	2850				2850						
Torsional Rigidity	–	Nm/arcmin	31				31						
Effciency	η	%	⩾97				⩾94						
Service Life	–	h	30000				30000						
Noise	–	dB	⩽60				⩽60						
Weight	–	Kg	3.0				3.7						
Backlash	P0	arcmin	⩽1				⩽3						
	P1		⩽3				⩽5						
	P2		⩽5				⩽7						
Operating Temperature	–	℃	-20~90				-20~90						
Lubrication	–		Synthetic Grease				Synthetic Grease						
Protection Class	–		IP65				IP65						
Mounting Position	–		Any Direction				Any Direction						
Moment of Inertia	J	$kg.cm^2$	0.51	0.47	0.45	0.44	0.13						

Notes:

- Speed ratio (i=Sin/Sout)
- When the output speed is 100 rpm, it acts on the center of the output shaft.
- For continous operation, the service life is no lessthan 10,000 hours.
- The noise value was measured based on the input rotational speed of 3000 rpm, i=10.

Any product models and parameters in this sample are subject to change without prior notice. Please confirm with the company before ordering.

TD Series - Smooth and Reliable

TD110 Series

TD110 One Stage

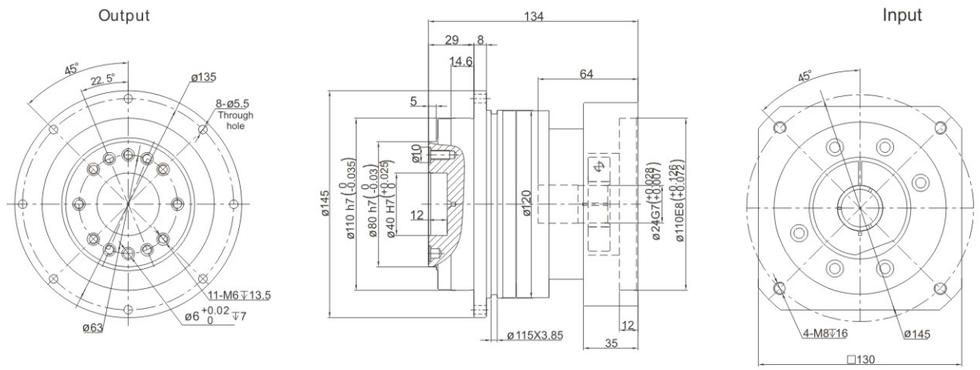

TD110 Two Stage

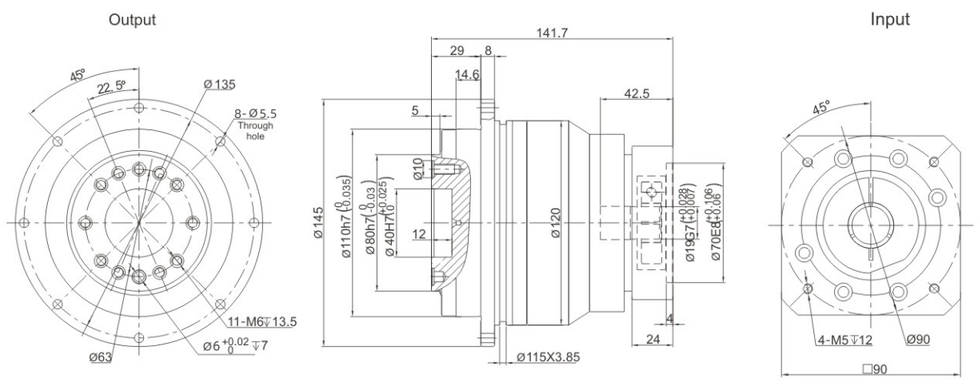

Performance Data

TD series reducer offers quiet operation with high axial load and tilt moment. High quality and capacity load bearing ensures smooth operation for any flange-operated applications.

TD110			One Stage				Two Stage						
Speed Ratio		i	4	5	7	10	20	25	35	40	50	70	100
Norminal Output Torque	T_1	Nm	270	330	300	230	270	330	300	270	330	300	230
Emergency Stop Torque	T_2	Nm	$T_1 \times 3$				$T_1 \times 3$						
Norminal Input Speed	S_1	rpm	4000				4000						
Maximum Input Speed	S_2	rpm	8000				8000						
Maximum Output Torque	T_4	Nm	$T_1 \times 3 \times 60\%$				$T_1 \times 3 \times 60\%$						
Maximum Bending Moment	M_a	Nm	430				430						
Maximum Axial Force	F_b	N	2990				2990						
Torsional Rigidity	–	Nm/arcmin	82				82						
Effciency	η	%	⩾97				⩾94						
Service Life	–	h	30000				30000						
Noise	–	dB	⩽63				⩽63						
Weight	–	Kg	5.6				7.3						
Backlash	P0	arcmin	⩽1				⩽3						
	P1		⩽3				⩽5						
	P2		⩽5				⩽7						
Operating Temperature	–	℃	-20~90				-20~90						
Lubrication	–		Synthetic Grease				Synthetic Grease						
Protection Class	–		IP65				IP65						
Mounting Position	–		Any Direction				Any Direction						
Moment of Inertia	J	$kg.cm^2$	2.87	2.71	2.62	2.57	0.47		0.44				

Notes:

- Speed ratio (i=Sin/Sout)
- When the output speed is 100 rpm, it acts on the center of the output shaft.
- For continous operation, the service life is no lessthan 10,000 hours.
- The noise value was measured based on the input rotational speed of 3000 rpm, i=10.

Any product models and parameters in this sample are subject to change without prior notice. Please confirm with the company before ordering.

TB
TBR
TD
TDR
TE
TER
TF
TCB
TCBR
TCE
TM

TD Series - Smooth and Reliable

TD140 Series

TD140 One Stage

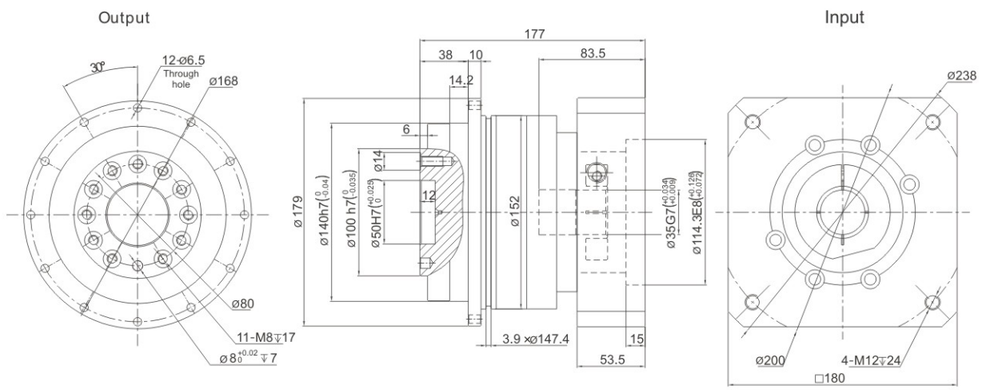

TD140 Two Stage

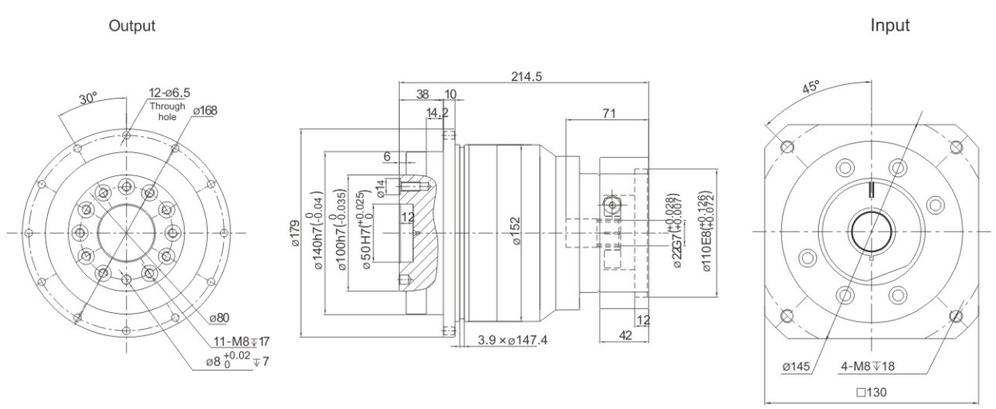

Performance Data

TD series reducer offers quiet operation with high axial load and tilt moment. High quality and capacity load bearing ensures smooth operation for any flange-operated applications.

TD140			One Stage				Two Stage						
Speed Ratio		i	4	5	7	10	20	25	35	40	50	70	100
Norminal Output Torque	T_1	Nm	560	650	550	450	560	650	550	560	650	550	450
Emergency Stop Torque	T_2	Nm	$T_1 \times 3$				$T_1 \times 3$						
Norminal Input Speed	S_1	rpm	3000				3000						
Maximum Input Speed	S_2	rpm	6000				6000						
Maximum Output Torque	T_4	Nm	$T_1 \times 3 \times 60\%$				$T_1 \times 3 \times 60\%$						
Maximum Bending Moment	M_a	Nm	1300				1300						
Maximum Axial Force	F_b	N	10590				10590						
Torsional Rigidity	–	Nm/arcmin	151				151						
Effciency	η	%	⩾97				⩾94						
Service Life	–	h	30000				30000						
Noise	–	dB	⩽65				⩽65						
Weight	–	Kg	11.9				15.9						
Backlash	P0	arcmin	⩽1				⩽3						
	P1		⩽3				⩽5						
	P2		⩽5				⩽7						
Operating Temperature	–	℃	-20~90				-20~90						
Lubrication	–		Synthetic Grease				Synthetic Grease						
Protection Class	–		IP65				IP65						
Mounting Position	–		Any Direction				Any Direction						
Moment of Inertia	J	$kg.cm^2$	7.54	7.42	7.14	7.03	2.71		2.57				

Notes:

- Speed ratio (i=Sin/Sout)
- When the output speed is 100 rpm, it acts on the center of the output shaft.
- For continous operation, the service life is no lessthan 10,000 hours.
- The noise value was measured based on the input rotational speed of 3000 rpm, i=10.

Any product models and parameters in this sample are subject to change without prior notice. Please confirm with the company before ordering.

TD Series - Smooth and Reliable

TD200 Series

TD200 One Stage

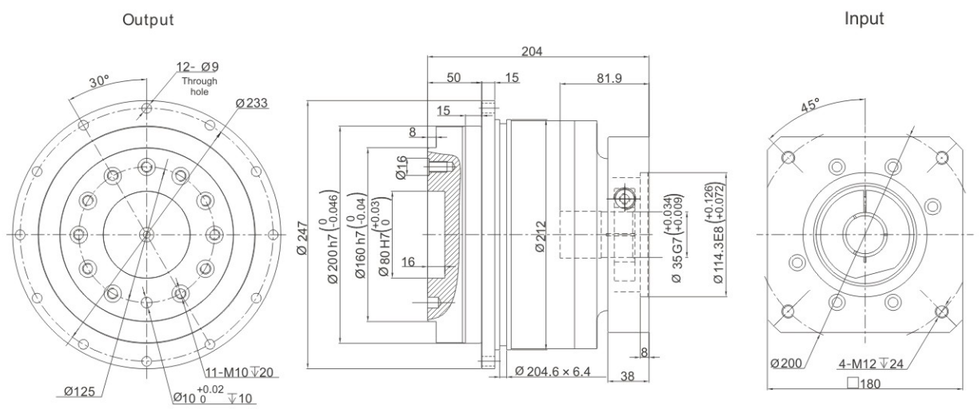

TD200 Two Stage

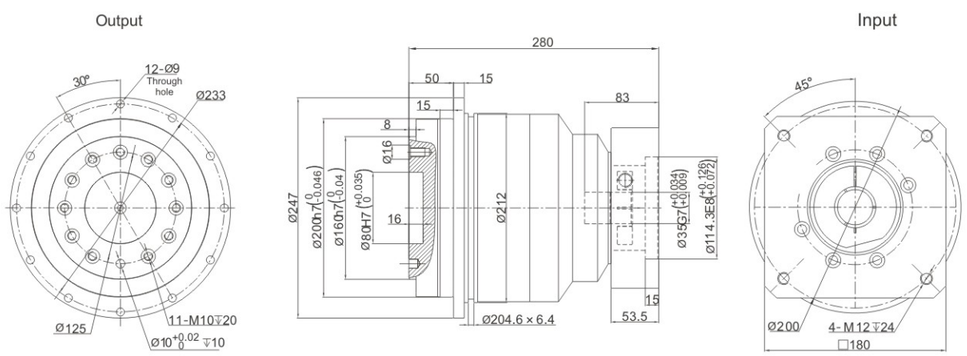

Performance Data

TD series reducer offers quiet operation with high axial load and tilt moment. High quality and capacity load bearing ensures smooth operation for any flange-operated applications.

TD200			One Stage				Two Stage						
Speed Ratio		i	4	5	7	10	20	25	35	40	50	70	100
Norminal Output Torque	T_1	Nm	1100	1200	1100	900	1100	1200	1100	1100	1200	1100	900
Emergency Stop Torque	T_2	Nm	$T_1 \times 3$				$T_1 \times 3$						
Norminal Input Speed	S_1	rpm	3000				3000						
Maximum Input Speed	S_2	rpm	6000				6000						
Maximum Output Torque	T_4	Nm	$T_1 \times 3 \times 60\%$				$T_1 \times 3 \times 60\%$						
Maximum Bending Moment	M_a	Nm	3064				3064						
Maximum Axial Force	F_b	N	16660				16660						
Torsional Rigidity	–	Nm/arcmin	440				440						
Efficiency	η	%	⩾97				⩾94						
Service Life	–	h	30000				30000						
Noise	–	dB	⩽66				⩽66						
Weight	–	Kg	31.6				36.9						
Backlash	P0	arcmin	⩽1				⩽3						
	P1		⩽3				⩽5						
	P2		⩽5				⩽7						
Operating Temperature	–	℃	-20~90				-20~90						
Lubrication	–		Synthetic Grease				Synthetic Grease						
Protection Class	–		IP65				IP65						
Mounting Position	–		Any Direction				Any Direction						
Moment of Inertia	J	kg.cm²	25.03	23.29	22.48	22.51	7.42		7.03				

Notes:

- Speed ratio (i=Sin/Sout)
- When the output speed is 100 rpm, it acts on the center of the output shaft.
- For continous operation, the service life is no lessthan 10,000 hours.
- The noise value was measured based on the input rotational speed of 3000 rpm, i=10.

Any product models and parameters in this sample are subject to change without prior notice. Please confirm with the company before ordering.

TB
TBR
TD
TDR
TE
TER
TF
TCB
TCBR
TCE
TM

TD255 Series

TD255 One Stage

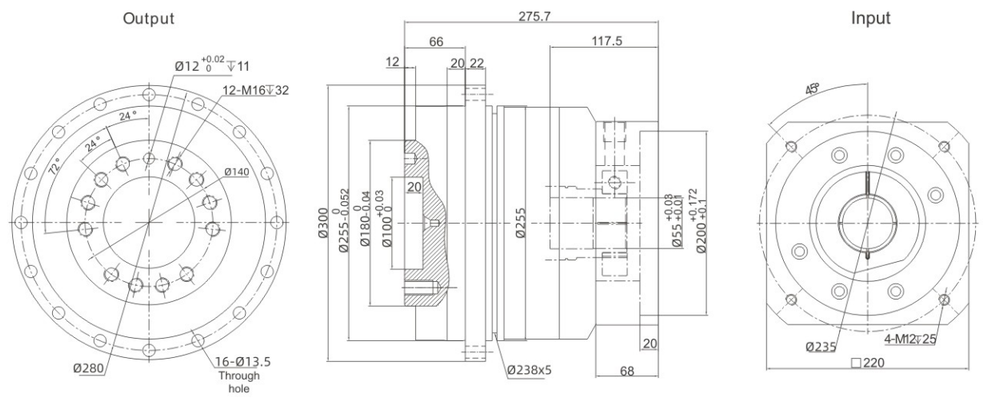

TD255 Two Stage

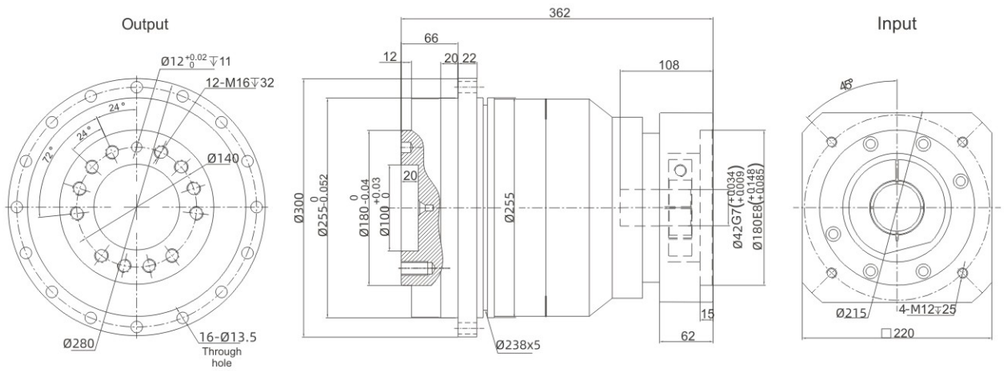

Performance Data

TD series reducer offers quiet operation with high axial load and tilt moment. High quality and capacity load bearing ensures smooth operation for any flange-operated applications.

TD255			One Stage				Two Stage						
Speed Ratio		i	4	5	7	10	20	25	35	40	50	70	100
Norminal Output Torque	T_1	Nm	1700	2000	1800	1500	1700	2000	1800	1700	2000	1800	1500
Emergency Stop Torque	T_2	Nm	$T_1 \times 3$				$T_1 \times 3$						
Norminal Input Speed	S_1	rpm	2000				2000						
Maximum Input Speed	S_2	rpm	4000				4000						
Maximum Output Torque	T_4	Nm	$T_1 \times 3 \times 60\%$				$T_1 \times 3 \times 60\%$						
Maximum Bending Moment	M_a	Nm	5900				5900						
Maximum Axial Force	F_b	N	29430				29430						
Torsional Rigidity	–	Nm/arcmin	1006				1006						
Effciency	η	%	⩾97				⩾94						
Service Life	–	h	30000				30000						
Noise	–	dB	⩽70				⩽70						
Weight	–	Kg	56.1				70.4						
Backlash	P0	arcmin	⩽1				⩽3						
	P1		⩽3				⩽5						
	P2		⩽5				⩽7						
Operating Temperature	–	℃	-20~90				-20~90						
Lubrication		–	Synthetic Grease				Synthetic Grease						
Protection Class		–	IP65				IP65						
Mounting Position		–	Any Direction				Any Direction						
Moment of Inertia	J	$kg.cm^2$	58.31	53.27	50.97	50.56	23.29		22.51				

Notes:

- Speed ratio (i=Sin/Sout)
- When the output speed is 100 rpm, it acts on the center of the output shaft.
- For continous operation, the service life is no lessthan 10,000 hours.
- The noise value was measured based on the input rotational speed of 3000 rpm, i=10.

Any product models and parameters in this sample are subject to change without prior notice. Please confirm with the company before ordering.

TDR Series - Smooth and Reliable

TDR064 Series

TDR064 One Stage

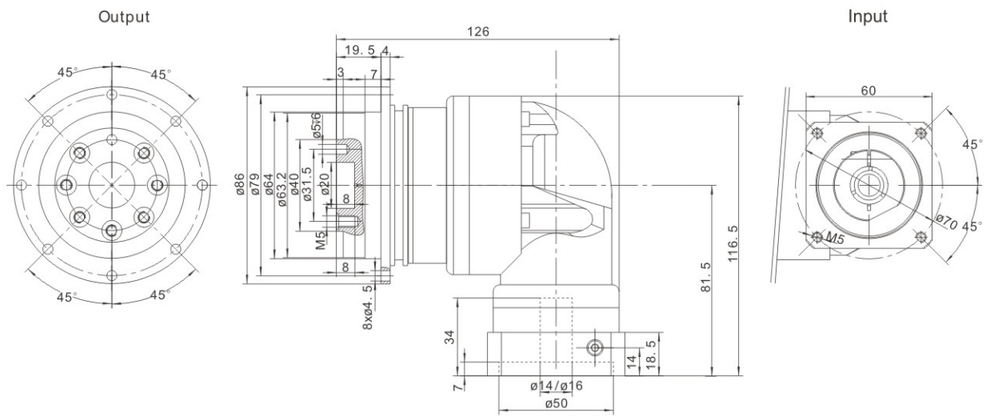

TDR064 Two Stage

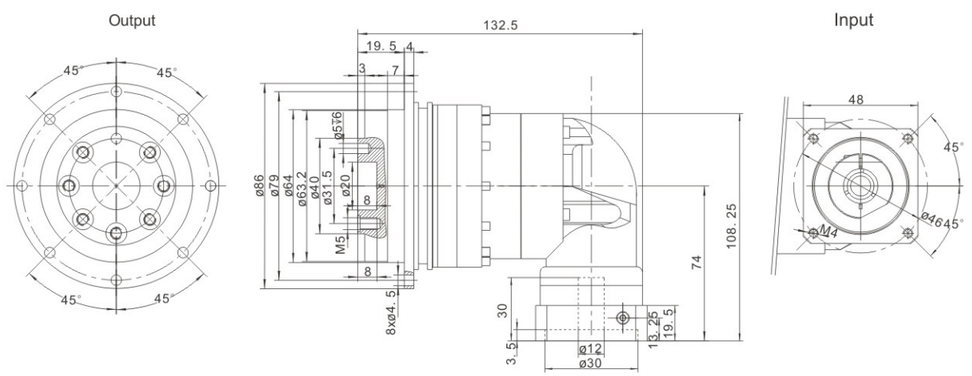

Performance Data

TDR series reducer offers quiet operation with high axial load and tilt moment. High quality and capacity load bearing ensures smooth operation for any flange-operated applications.

TDR064			One Stage						Two Stage							
Speed Ratio	i		4	5	7	10	14	20	25	35	40	50	70	100	140	200
Norminal Output Torque	T_1	Nm	48	60	50	40	42	40	60	50	48	60	50	40	-	-
Emergency Stop Torque	T_2	Nm	$T_1 \times 3$						$T_1 \times 3$							
Norminal Input Speed	S_1	rpm	5000						5000							
Maximum Input Speed	S_2	rpm	10000						10000							
Maximum Output Torque	T_4	Nm	$T_1 \times 3 \times 60\%$						$T_1 \times 3 \times 60\%$							
Maximum Bending Moment	M_a	Nm	125						125							
Maximum Axial Force	F_b	N	1050						1050							
Torsional Rigidity	–	Nm/arcmin	13						13							
Effciency	η	%	⩾95						⩾92							
Service Life	–	h	30000						30000							
Noise	–	dB	⩽63						⩽63							
Weight	–	Kg	2.1						2.4							
Backlash	P0	arcmin	-						-							
	P1		⩽4						⩽7							
	P2		⩽6						⩽9							
Operating Temperature	–	℃	-20~90						-20~90							
Lubrication	–		Synthetic Grease						Synthetic Grease							
Protection Class	–		IP65						IP65							
Mounting Position	–		Any Direction						Any Direction							
Moment of Inertia	J	$kg.cm^2$	0.35			0.07			0.09							

Notes:

- Speed ratio (i=Sin/Sout)
- When the output speed is 100 rpm, it acts on the center of the output shaft.
- For continous operation, the service life is no lessthan 10,000 hours.
- The noise value was measured based on the input rotational speed of 3000 rpm, i=10.

Any product models and parameters in this sample are subject to change without prior notice. Please confirm with the company before ordering.

TDR Series - Smooth and Reliable

TDR090 Series

TDR090 One Stage

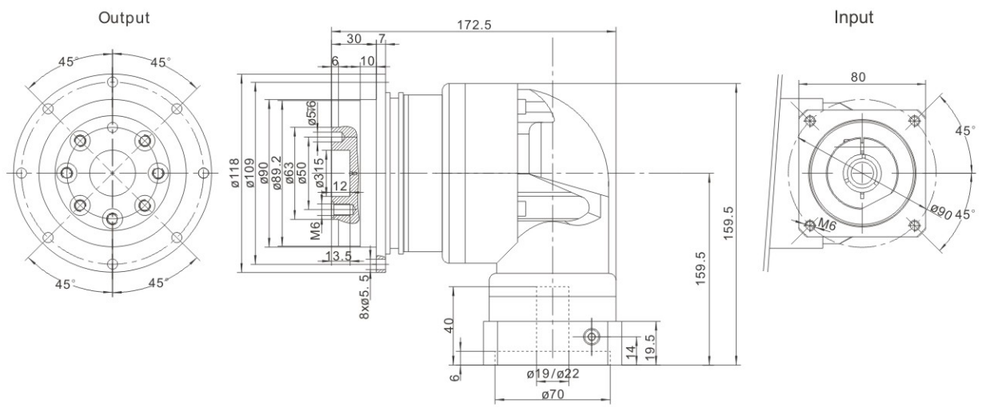

TDR090 Two Stage

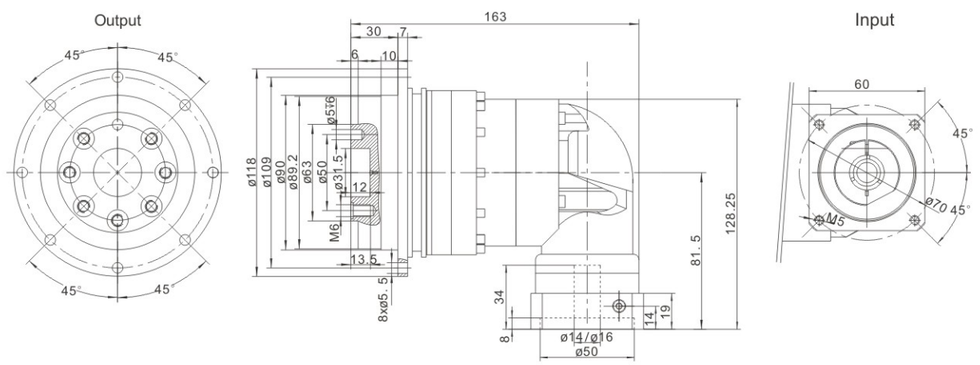

Performance Data

TDR series reducer offers quiet operation with high axial load and tilt moment. High quality and capacity load bearing ensures smooth operation for any flange-operated applications.

TDR090			One Stage						Two Stage							
Speed Ratio	i		4	5	7	10	14	20	25	35	40	50	70	100	140	200
Norminal Output Torque	T_1	Nm	130	160	140	100	140	100	160	140	130	160	140	100	140	100
Emergency Stop Torque	T_2	Nm	$T_1 \times 3$						$T_1 \times 3$							
Norminal Input Speed	S_1	rpm	4000						4000							
Maximum Input Speed	S_2	rpm	8000						8000							
Maximum Output Torque	T_4	Nm	$T_1 \times 3 \times 60\%$						$T_1 \times 3 \times 60\%$							
Maximum Bending Moment	M_a	Nm	235						235							
Maximum Axial Force	F_b	N	2850						2850							
Torsional Rigidity	–	Nm/arcmin	31						31							
Effciency	η	%	⩾95						⩾92							
Service Life	–	h	30000						30000							
Noise	–	dB	⩽65						⩽65							
Weight	–	Kg	5.9						4.5							
Backlash	P0	arcmin	⩽2						⩽4							
	P1		⩽4						⩽7							
	P2		⩽6						⩽9							
Operating Temperature	–	℃	-20~90						-20~90							
Lubrication	–		Synthetic Grease						Synthetic Grease							
Protection Class	–		IP65						IP65							
Mounting Position	–		Any Direction						Any Direction							
Moment of Inertia	J	$kg.cm^2$	2.25			1.87			0.35					0.31		

Notes:

- Speed ratio (i=Sin/Sout)
- When the output speed is 100 rpm, it acts on the center of the output shaft.
- For continous operation, the service life is no lessthan 10,000 hours.
- The noise value was measured based on the input rotational speed of 3000 rpm, i=10.

Any product models and parameters in this sample are subject to change without prior notice. Please confirm with the company before ordering.

TDR110 Series

TDR110 One Stage

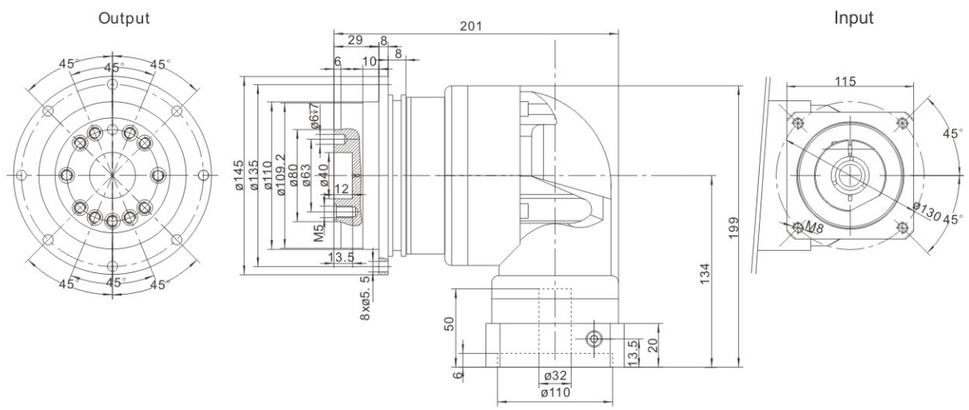

TDR110 Two Stage

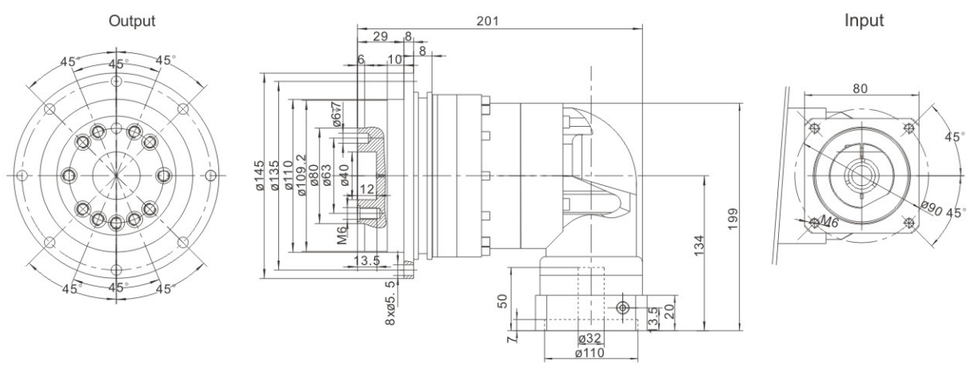

Performance Data

TDR series reducer offers quiet operation with high axial load and tilt moment. High quality and capacity load bearing ensures smooth operation for any flange-operated applications.

TDR110			One Stage						Two Stage							
Speed Ratio	i		4	5	7	10	14	20	25	35	40	50	70	100	140	200
Norminal Output Torque	T_1	Nm	270	330	300	230	300	230	330	300	270	330	300	230	300	230
Emergency Stop Torque	T_2	Nm	$T_1 \times 3$						$T_1 \times 3$							
Norminal Input Speed	S_1	rpm	4000						4000							
Maximum Input Speed	S_2	rpm	8000						8000							
Maximum Output Torque	T_4	Nm	$T_1 \times 3 \times 60\%$						$T_1 \times 3 \times 60\%$							
Maximum Bending Moment	M_a	Nm	430						430							
Maximum Axial Force	F_b	N	2990						2990							
Torsional Rigidity	–	Nm/arcmin	82						82							
Effciency	η	%	⩾95						⩾92							
Service Life	–	h	30000						30000							
Noise	–	dB	⩽68						⩽68							
Weight	–	Kg	10.5						9.8							
Backlash	P0	arcmin	⩽2						⩽4							
	P1		⩽4						⩽7							
	P2		⩽6						⩽9							
Operating Temperature	–	℃	-20~90						-20~90							
Lubrication	–		Synthetic Grease						Synthetic Grease							
Protection Class	–		IP65						IP65							
Mounting Position	–		Any Direction						Any Direction							
Moment of Inertia	J	$kg.cm^2$	6.84			6.25			2.25						1.87	

Notes:

- Speed ratio (i=Sin/Sout)
- When the output speed is 100 rpm, it acts on the center of the output shaft.
- For continous operation, the service life is no lessthan 10,000 hours.
- The noise value was measured based on the input rotational speed of 3000 rpm, i=10.

Any product models and parameters in this sample are subject to change without prior notice. Please confirm with the company before ordering.

TDR140 Series

TDR140 One Stage

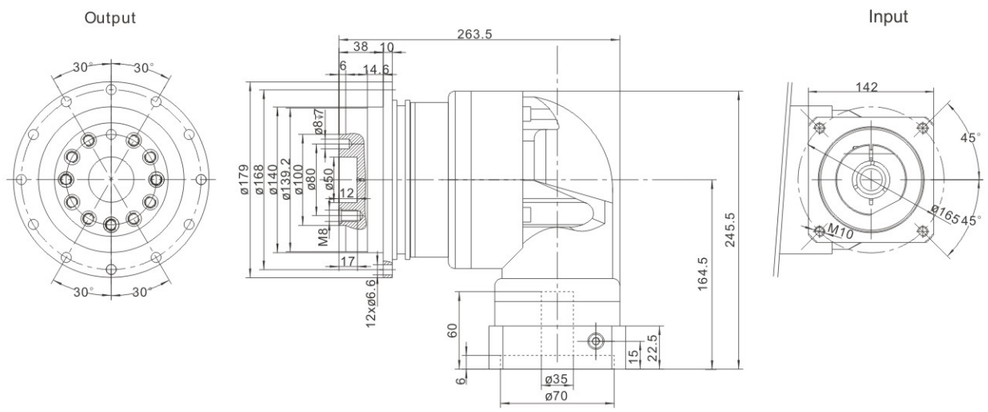

TDR140 Two Stage

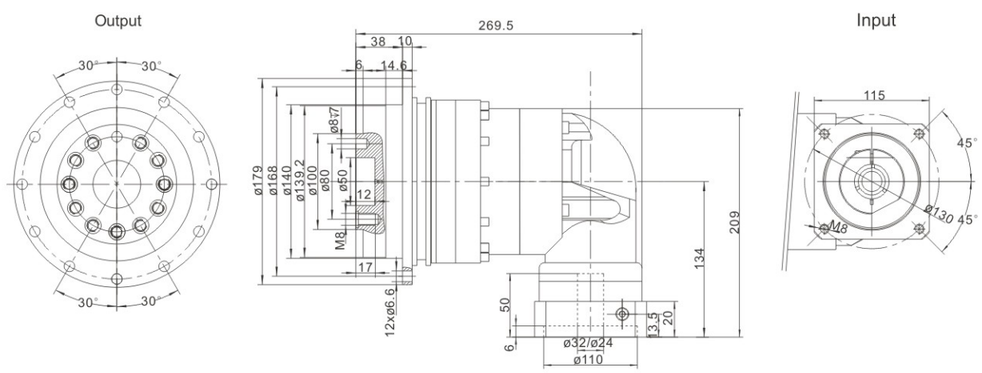

Performance Data

TDR series reducer offers quiet operation with high axial load and tilt moment. High quality and capacity load bearing ensures smooth operation for any flange-operated applications.

TDR140			One Stage						Two Stage							
Speed Ratio	i		4	5	7	10	14	20	25	35	40	50	70	100	140	200
Norminal Output Torque	T_1	Nm	560	650	550	450	550	450	650	550	560	650	550	450	550	450
Emergency Stop Torque	T_2	Nm	$T_1 \times 3$						$T_1 \times 3$							
Norminal Input Speed	S_1	rpm	3000						3000							
Maximum Input Speed	S_2	rpm	6000						6000							
Maximum Output Torque	T_4	Nm	$T_1 \times 3 \times 60\%$						$T_1 \times 3 \times 60\%$							
Maximum Bending Moment	M_a	Nm	1300						1300							
Maximum Axial Force	F_b	N	10590						10590							
Torsional Rigidity	–	Nm/arcmin	151						151							
Effciency	η	%	⩾95						⩾92							
Service Life	–	h	30000						30000							
Noise	–	dB	⩽70						⩽70							
Weight	–	Kg	21.9						20.1							
Backlash	P0	arcmin	⩽2						⩽4							
	P1		⩽4						⩽7							
	P2		⩽6						⩽9							
Operating Temperature	–	℃	-20~90						-20~90							
Lubrication	–		Synthetic Grease						Synthetic Grease							
Protection Class	–		IP65						IP65							
Mounting Position	–		Any Direction						Any Direction							
Moment of Inertia	J	$kg.cm^2$	23.4			21.8			6.84						6.25	

Notes:

- Speed ratio (i=Sin/Sout)
- When the output speed is 100 rpm, it acts on the center of the output shaft.
- For continous operation, the service life is no lessthan 10,000 hours.
- The noise value was measured based on the input rotational speed of 3000 rpm, i=10.

Any product models and parameters in this sample are subject to change without prior notice. Please confirm with the company before ordering.

TDR Series - Smooth and Reliable

TDR200 Series

TDR200 One Stage

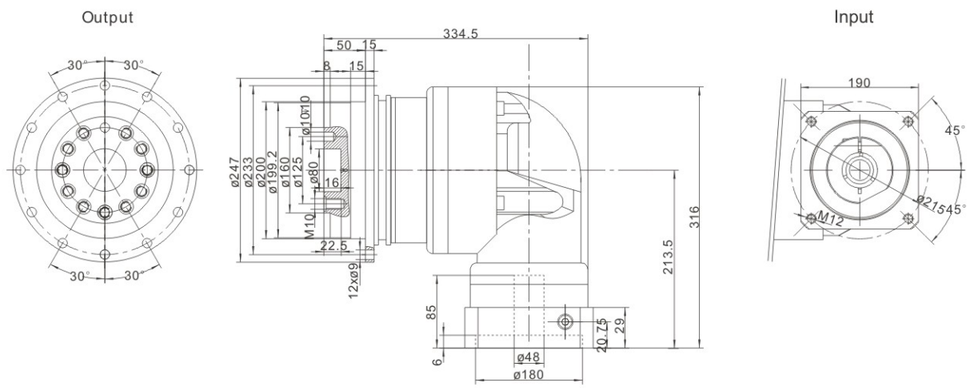

TDR200 Two Stage

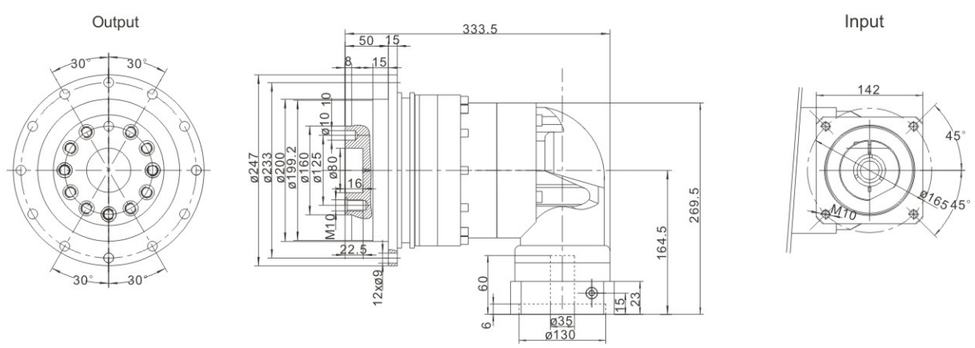

Performance Data

TDR series reducer offers quiet operation with high axial load and tilt moment. High quality and capacity load bearing ensures smooth operation for any flange-operated applications.

TDR200			One Stage						Two Stage							
Speed Ratio	i		4	5	7	10	14	20	25	35	40	50	70	100	140	200
Norminal Output Torque	T_1	Nm	1100	1200	1100	900	1100	900	1200	1100	1100	1200	1100	900	1100	900
Emergency Stop Torque	T_2	Nm	$T_1 \times 3$						$T_1 \times 3$							
Norminal Input Speed	S_1	rpm	3000						3000							
Maximum Input Speed	S_2	rpm	6000						6000							
Maximum Output Torque	T_4	Nm	$T_1 \times 3 \times 60\%$						$T_1 \times 3 \times 60\%$							
Maximum Bending Moment	M_a	Nm	3064						3064							
Maximum Axial Force	F_b	N	16660						16660							
Torsional Rigidity	–	Nm/arcmin	440						440							
Effciency	η	%	⩾95						⩾92							
Service Life	–	h	30000						30000							
Noise	–	dB	⩽72						⩽72							
Weight	–	Kg	50.9						45.4							
Backlash	P0	arcmin	⩽2						⩽4							
	P1		⩽4						⩽7							
	P2		⩽6						⩽9							
Operating Temperature	–	℃	-20~90						-20~90							
Lubrication	–		Synthetic Grease						Synthetic Grease							
Protection Class	–		IP65						IP65							
Mounting Position	–		Any Direction						Any Direction							
Moment of Inertia	J	$kg.cm^2$	68.9			65.6			23.4					21.8		

Notes:

- Speed ratio (i=Sin/Sout)
- When the output speed is 100 rpm, it acts on the center of the output shaft.
- For continous operation, the service life is no lessthan 10,000 hours.
- The noise value was measured based on the input rotational speed of 3000 rpm, i=10.

Any product models and parameters in this sample are subject to change without prior notice. Please confirm with the company before ordering.

Precision Planetary Reducer

Creative Structure Design

+

TE/TER SERIES

+

Optimized Backlash & High Rigidity

TE series planetary reducer combines innovation, efficiency and quality, maximizing customer value and performance.

GEARKO

DRIVES THE PRECISION

TE Series - High Precision Planetary Reducer

TE050 Series

TE050 One Stage

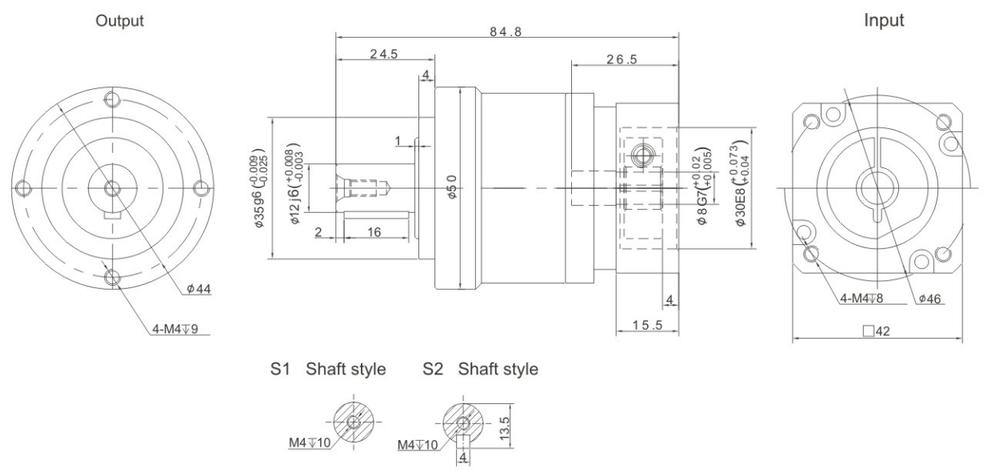

TE050 Two Stage

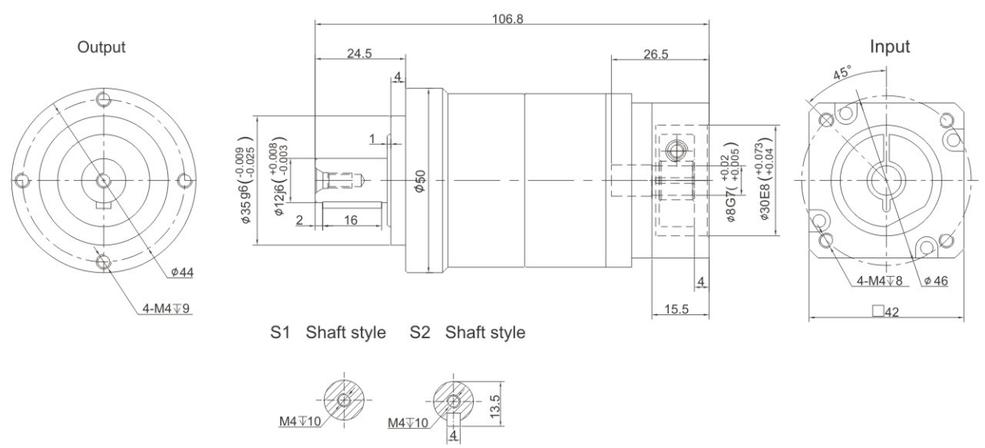

Performance Data

TE series offer additional installation flexibility in addition to TB series but with zero compromise in performance. It is with high precision and robust design.

TE050			One Stage								Two Stage									
Speed Ratio	i		-	4	5	6	7	8	9	10	-	20	25	30	35	40	50	60	70	80	100
Norminal Output Torque	T_1	Nm	-	19	22	20	19	17	-	14	-	19	22	20	19	17	22	20	19	17	14
Emergency Stop Torque	T_2	Nm	$T_1\times3$								$T_1\times3$										
Norminal Input Speed	S_1	rpm	5000								5000										
Maximum Input Speed	S_2	rpm	10000								10000										
Maximum Output Torque	T_4	Nm	$T_1\times3\times60\%$								$T_1\times3\times60\%$										
Maximum Radial Force	F_a	N	702								702										
Maximum Axial Force	F_b	N	390								390										
Torsional Rigidity	–	Nm/arcmin	3								3										
Effciency	η	%	⩾97								⩾94										
Service Life	–	h	20000								20000										
Noise	–	dB	⩽56								⩽56										
Weight	–	Kg	0.6								0.9										
Backlash	P0	arcmin	–								–										
	P1		⩽3								⩽5										
	P2		⩽5								⩽7										
Operating Temperature	–	℃	-20~90								-20~90										
Lubrication	–		Synthetic Grease								Synthetic Grease										
Protection Class	–		IP65								IP65										
Mounting Position	–		Any Direction								Any Direction										
Moment of Inertia	J	kg.cm²	0.03								0.03										

Notes:

- Speed ratio (i=Sin/Sout)
- When the output speed is 100 rpm, it acts on the center of the output shaft.
- For continous operation, the service life is no lessthan 10,000 hours.
- The noise value was measured based on the input rotational speed of 3000 rpm, i=10.

Any product models and parameters in this sample are subject to change without prior notice. Please confirm with the company before ordering.

TE Series - High Precision Planetary Reducer

TE070 Series

TE070 One Stage

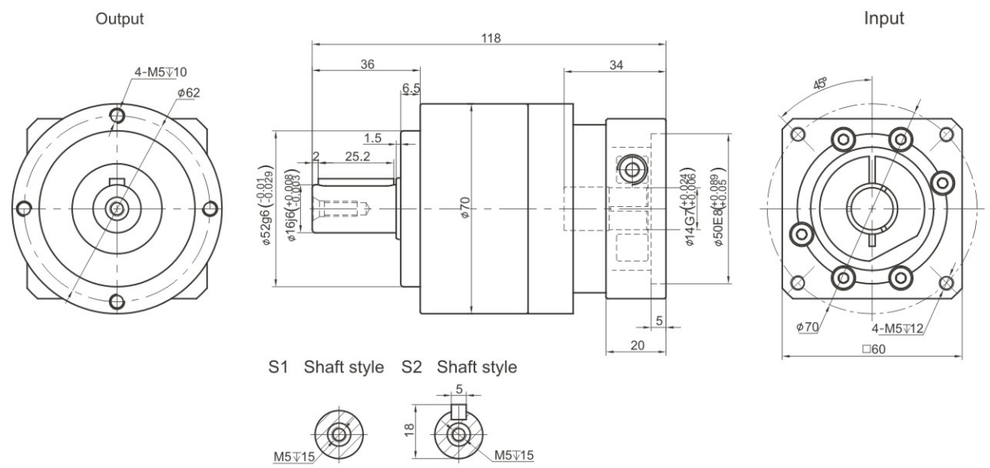

TE070 Two Stage

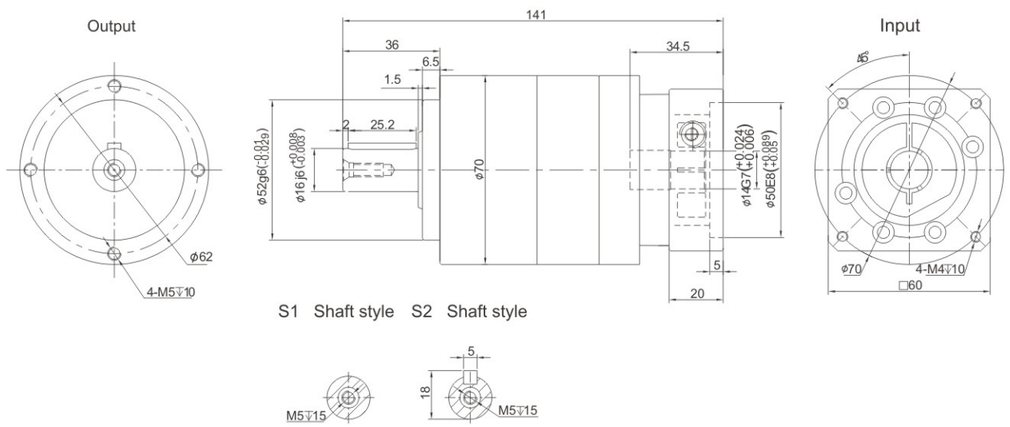

Performance Data

TE series offer additional installation flexibility in addition to TB series but with zero compromise in performance. It is with high precision and robust design.

TE070			One Stage								Two Stage										
Speed Ratio	i		3	4	5	6	7	8	9	10	15	20	25	30	35	40	50	60	70	80	100
Norminal Output Torque	T_1	Nm	55	50	60	55	50	45	-	40	55	50	60	55	50	45	60	55	50	45	40
Emergency Stop Torque	T_2	Nm	$T_1 \times 3$								$T_1 \times 3$										
Norminal Input Speed	S_1	rpm	5000								5000										
Maximum Input Speed	S_2	rpm	10000								10000										
Maximum Output Torque	T_4	Nm	$T_1 \times 3 \times 60\%$								$T_1 \times 3 \times 60\%$										
Maximum Radial Force	F_a	N	1377								1377										
Maximum Axial Force	F_b	N	765								765										
Torsional Rigidity	–	Nm/arcmin	7								7										
Effciency	η	%	≥97								≥94										
Service Life	–	h	20000								20000										
Noise	–	dB	≤58								≤58										
Weight	–	Kg	1.4								1.6										
Backlash	P0	arcmin	–								–										
	P1		≤3								≤5										
	P2		≤5								≤7										
Operating Temperature	–	℃	-20~90								-20~90										
Lubrication	–		Synthetic Grease								Synthetic Grease										
Protection Class	–		IP65								IP65										
Mounting Position	–		Any Direction								Any Direction										
Moment of Inertia	J	kg.cm²	0.16	0.14	0.13						0.03										

Notes:

- Speed ratio (i=Sin/Sout)
- When the output speed is 100 rpm, it acts on the center of the output shaft.
- For continous operation, the service life is no lessthan 10,000 hours.
- The noise value was measured based on the input rotational speed of 3000 rpm, i=10.

Any product models and parameters in this sample are subject to change without prior notice. Please confirm with the company before ordering.

TE Series - High Precision Planetary Reducer

TE090 Series

TE090 One Stage

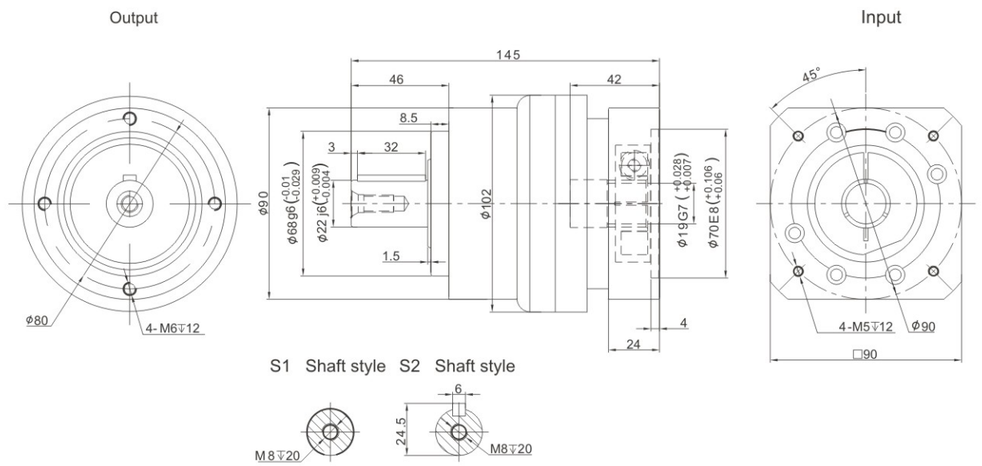

TE090 Two Stage

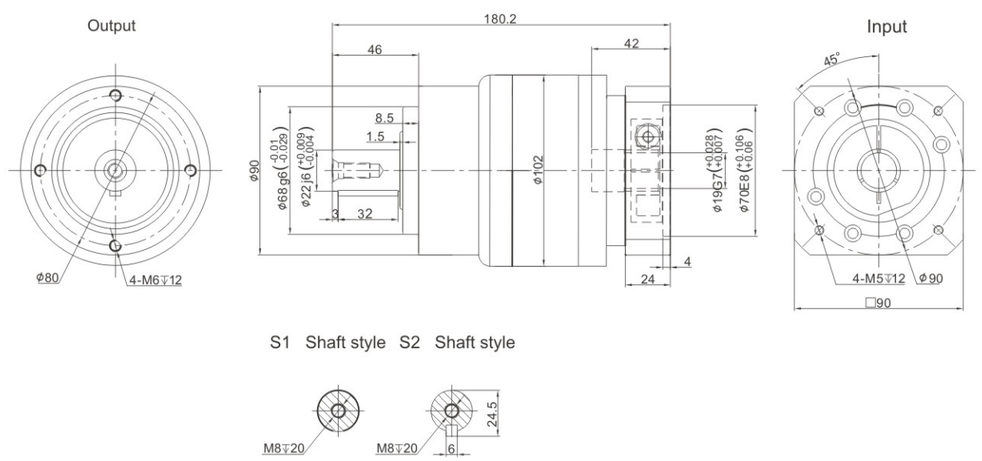

Performance Data

TE series offer additional installation flexibility in addition to TB series but with zero compromise in performance. It is with high precision and robust design.

TE090			One Stage								Two Stage									
Speed Ratio		i	3	4	5	6	7	8	9	10	15	20	25	30	35	40	50	60	70	80	100
Norminal Output Torque	T_1	Nm	130	140	160	150	140	120	-	100	130	140	160	150	140	120	160	150	140	120	100
Emergency Stop Torque	T_2	Nm	$T_1 \times 3$								$T_1 \times 3$										
Norminal Input Speed	S_1	rpm	4000								4000										
Maximum Input Speed	S_2	rpm	8000								8000										
Maximum Output Torque	T_4	Nm	$T_1 \times 3 \times 60\%$								$T_1 \times 3 \times 60\%$										
Maximum Radial Force	F_a	N	2985								2985										
Maximum Axial Force	F_b	N	1625								1625										
Torsional Rigidity	–	Nm/arcmin	14								14										
Effciency	η	%	⩾97								⩾94										
Service Life	–	h	20000								20000										
Noise	–	dB	⩽60								⩽60										
Weight	–	Kg	3.3								4.7										
Backlash	P0	arcmin	–								–										
	P1		⩽3								⩽5										
	P2		⩽5								⩽7										
Operating Temperature	–	℃	-20~90								-20~90										
Lubrication		–	Synthetic Grease								Synthetic Grease										
Protection Class		–	IP65								IP65										
Mounting Position		–	Any Direction								Any Direction										
Moment of Inertia	J	kg.cm²	0.61	0.48	0.47	0.45		0.44			0.13										

Notes:

- Speed ratio (i=Sin/Sout)
- When the output speed is 100 rpm, it acts on the center of the output shaft.
- For continous operation, the service life is no lessthan 10,000 hours.
- The noise value was measured based on the input rotational speed of 3000 rpm, i=10.

Any product models and parameters in this sample are subject to change without prior notice. Please confirm with the company before ordering.

TE Series - High Precision Planetary Reducer

TE120 Series

TE120 One Stage

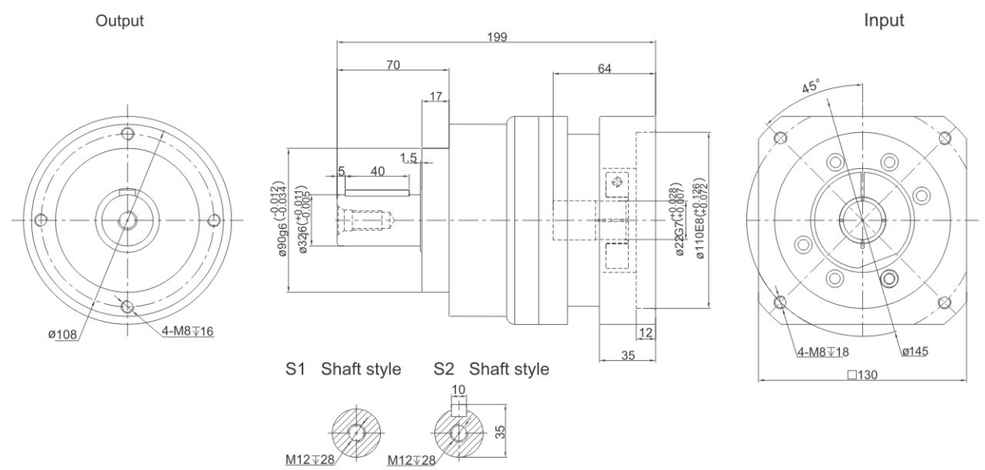

TE120 Two Stage

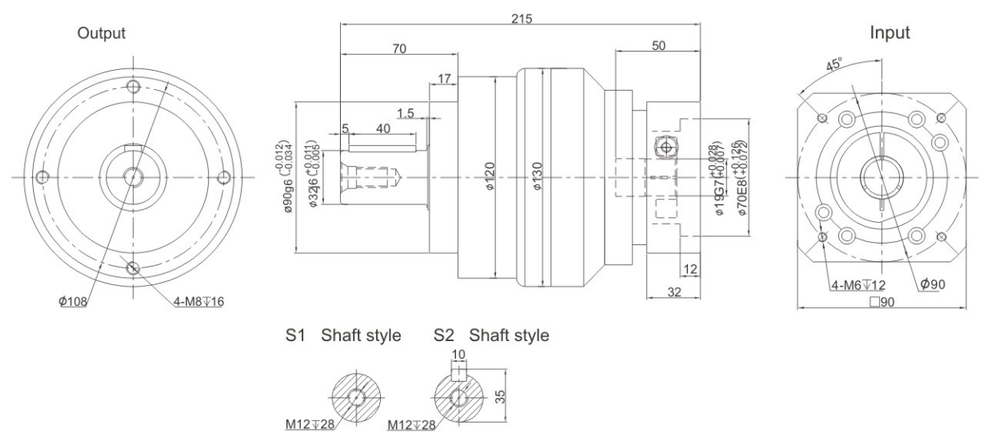

Performance Data

TE series offer additional installation flexibility in addition to TB series but with zero compromise in performance. It is with high precision and robust design.

TE120			One Stage								Two Stage									
Speed Ratio		i	3	4	5	6	7	8	9	10	15	20	25	30	35	40	50	60	70	80	100
Norminal Output Torque	T_1	Nm	208	290	330	310	300	260	-	230	208	290	330	310	300	260	330	310	300	260	230
Emergency Stop Torque	T_2	Nm	$T_1 \times 3$								$T_1 \times 3$										
Norminal Input Speed	S_1	rpm	4000								4000										
Maximum Input Speed	S_2	rpm	8000								8000										
Maximum Output Torque	T_4	Nm	$T_1 \times 3 \times 60\%$								$T_1 \times 3 \times 60\%$										
Maximum Radial Force	F_a	N	6100								6100										
Maximum Axial Force	F_b	N	3350								3350										
Torsional Rigidity	–	Nm/arcmin	25								25										
Effciency	η	%	⩾97								⩾94										
Service Life	–	h	20000								20000										
Noise	–	dB	⩽63								⩽63										
Weight	–	Kg	6.9								8.7										
Backlash	P0	arcmin	–								–										
	P1		⩽3								⩽5										
	P2		⩽5								⩽7										
Operating Temperature	–	℃	-20~90								-20~90										
Lubrication	–		Synthetic Grease								Synthetic Grease										
Protection Class	–		IP65								IP65										
Mounting Position	–		Any Direction								Any Direction										
Moment of Inertia	J	kg.cm²	3.25	2.74	2.71	2.65	2.62	2.58	-	2.57	0.47						0.44				

Notes:

- Speed ratio (i=Sin/Sout)
- When the output speed is 100 rpm, it acts on the center of the output shaft.
- For continous operation, the service life is no lessthan 10,000 hours.
- The noise value was measured based on the input rotational speed of 3000 rpm, i=10.

Any product models and parameters in this sample are subject to change without prior notice. Please confirm with the company before ordering.

TE Series - High Precision Planetary Reducer

TE155 Series

TE155 One Stage

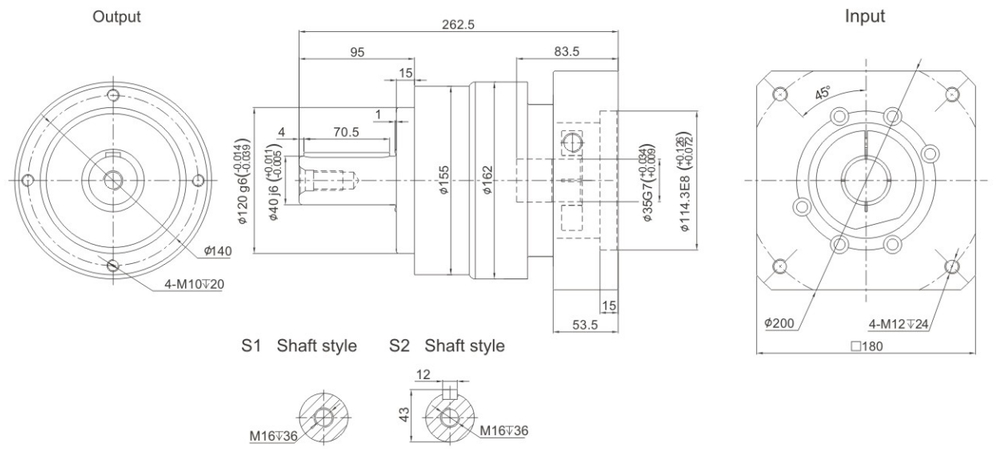

TE155 Two Stage

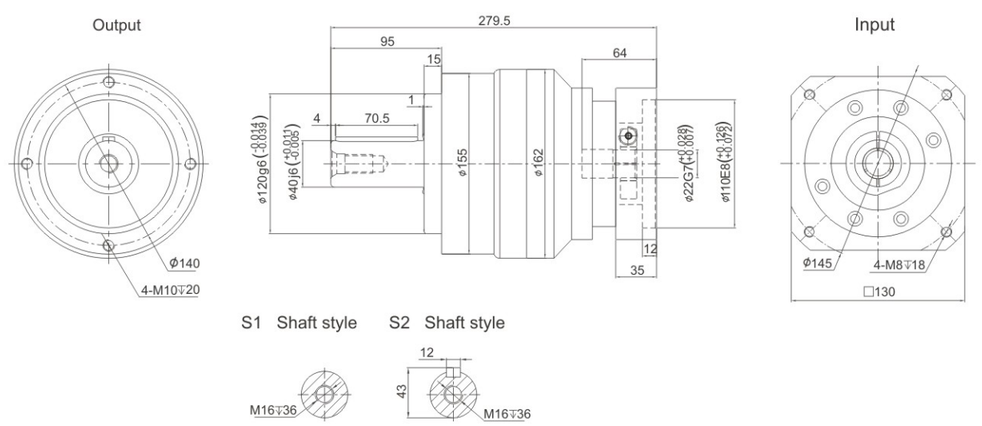

Performance Data

TE series offer additional installation flexibility in addition to TB series but with zero compromise in performance. It is with high precision and robust design.

TE155			One Stage								Two Stage										
Speed Ratio		i	3	4	5	6	7	8	9	10	15	20	25	30	35	40	50	60	70	80	100
Norminal Output Torque	T_1	Nm	342	542	650	600	550	500	-	450	342	542	650	600	550	500	650	600	550	500	450
Emergency Stop Torque	T_2	Nm	$T_1 \times 3$								$T_1 \times 3$										
Norminal Input Speed	S_1	rpm	3000								3000										
Maximum Input Speed	S_2	rpm	6000								6000										
Maximum Output Torque	T_4	Nm	$T_1 \times 3 \times 60\%$								$T_1 \times 3 \times 60\%$										
Maximum Radial Force	F_a	N	8460								8460										
Maximum Axial Force	F_b	N	4700								4700										
Torsional Rigidity	–	Nm/arcmin	50								50										
Effciency	η	%	≥97								≥94										
Service Life	–	h	20000								20000										
Noise	–	dB	≤65								≤65										
Weight	–	Kg	13								17										
Backlash	P0	arcmin	–								–										
	P1		≤3								≤5										
	P2		≤5								≤7										
Operating Temperature	–	℃	-20~90								-20~90										
Lubrication	–		Synthetic Grease								Synthetic Grease										
Protection Class	–		IP65								IP65										
Mounting Position	–		Any Direction								Any Direction										
Moment of Inertia	J	kg.cm²	9.21	7.54	7.42	7.25	7.14	7.07	-	7.03	2.71				2.57						

Notes:

- Speed ratio (i=Sin/Sout)
- When the output speed is 100 rpm, it acts on the center of the output shaft.
- For continous operation, the service life is no lessthan 10,000 hours.
- The noise value was measured based on the input rotational speed of 3000 rpm, i=10.

Any product models and parameters in this sample are subject to change without prior notice. Please confirm with the company before ordering.

TE Series - High Precision Planetary Reducer

TE205 Series

TE205 One Stage

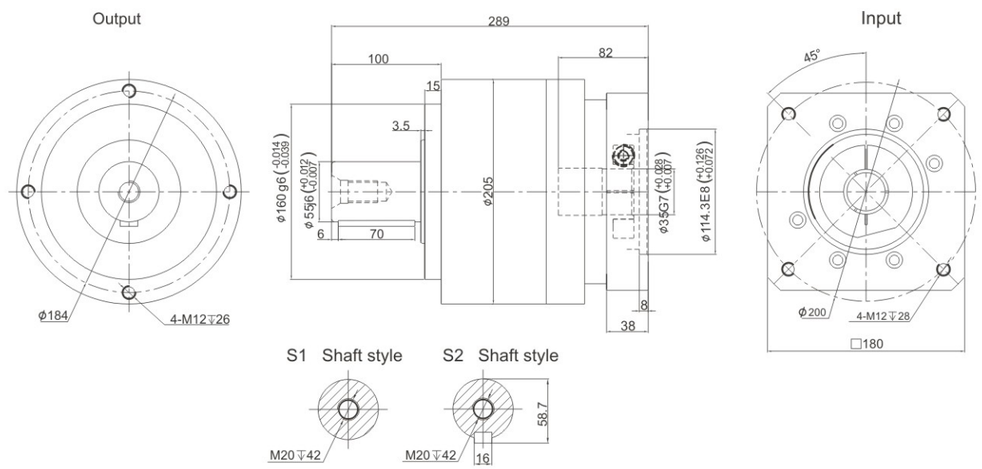

TE205 Two Stage

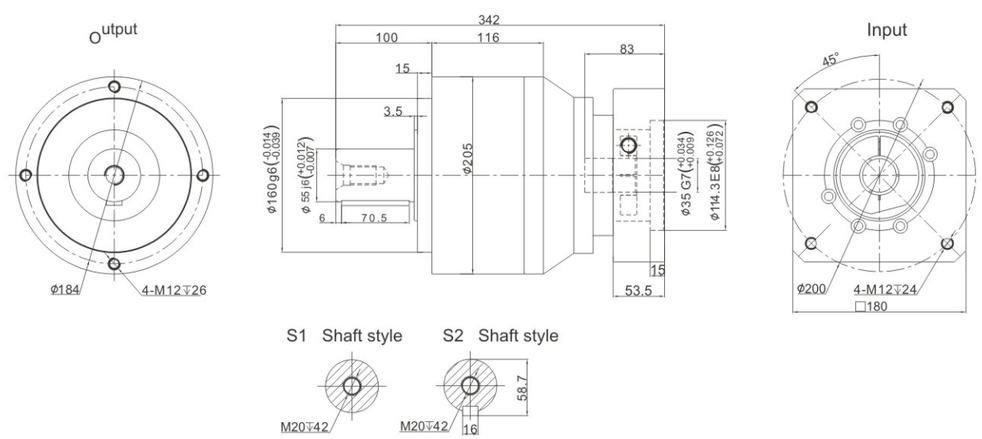

Performance Data

TE series offer additional installation flexibility in addition to TB series but with zero compromise in performance. It is with high precision and robust design.

TE205			One Stage								Two Stage									
Speed Ratio		i	3	4	5	6	7	8	9	10	15	20	25	30	35	40	50	60	70	80	100
Norminal Output Torque	T_1	Nm	588	1050	1200	1100	1100	1000	-	900	588	1050	1200	1100	1100	1000	1200	1100	1100	1000	900
Emergency Stop Torque	T_2	Nm	$T_1 \times 3$								$T_1 \times 3$										
Norminal Input Speed	S_1	rpm	3000								3000										
Maximum Input Speed	S_2	rpm	6000								6000										
Maximum Output Torque	T_4	Nm	$T_1 \times 3 \times 60\%$								$T_1 \times 3 \times 60\%$										
Maximum Radial Force	F_a	N	13050								13050										
Maximum Axial Force	F_b	N	7250								7250										
Torsional Rigidity	–	Nm/arcmin	145								145										
Effciency	η	%	⩾97								⩾94										
Service Life	–	h	20000								20000										
Noise	–	dB	⩽67								⩽67										
Weight	–	Kg	31								35										
Backlash	P0	arcmin	–								–										
	P1		⩽3								⩽5										
	P2		⩽5								⩽7										
Operating Temperature	–	℃	-20~90								-20~90										
Lubrication	–		Synthetic Grease								Synthetic Grease										
Protection Class	–		IP65								IP65										
Mounting Position	–		Any Direction								Any Direction										
Moment of Inertia	J	kg.cm²	28.98	23.67	23.29	22.75	22.48	22.59	-	22.51	7.42					7.03					

Notes:

- Speed ratio (i=Sin/Sout)
- When the output speed is 100 rpm, it acts on the center of the output shaft.
- For continous operation, the service life is no lessthan 10,000 hours.
- The noise value was measured based on the input rotational speed of 3000 rpm, i=10.

Any product models and parameters in this sample are subject to change without prior notice. Please confirm with the company before ordering.

TE Series - High Precision Planetary Reducer

TE235 Series

TE235 One Stage

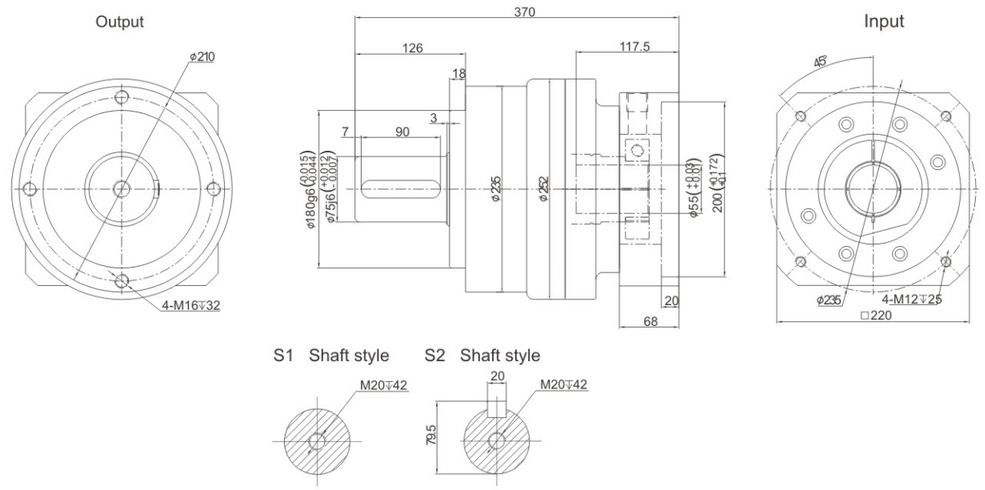

TE235 Two Stage

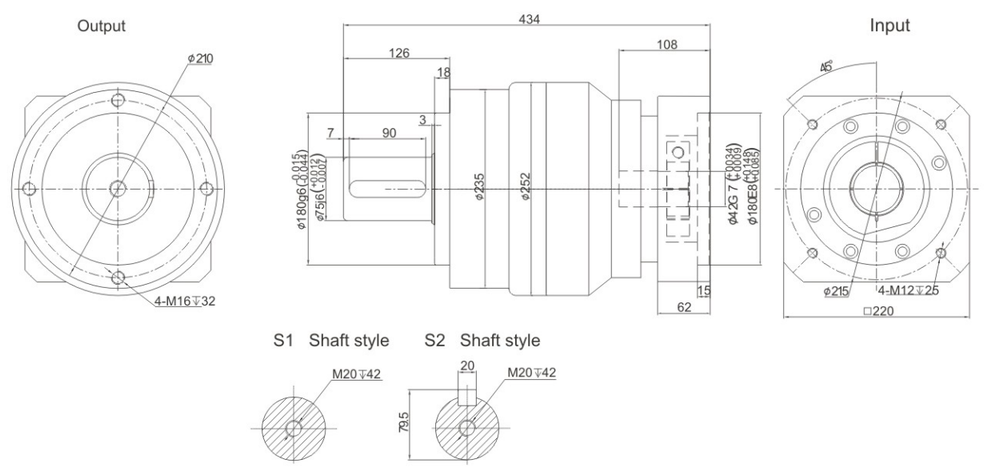

Performance Data

TE series offer additional installation flexibility in addition to TB series but with zero compromise in performance. It is with high precision and robust design.

TE235			One Stage								Two Stage									
Speed Ratio		i	3	4	5	6	7	8	9	10	15	20	25	30	35	40	50	60	70	80	100
Norminal Output Torque	T_1	Nm	1140	1700	2000	1900	1800	1600	-	1500	1140	1700	2000	1900	1800	1600	2000	1900	1800	1600	1500
Emergency Stop Torque	T_2	Nm	$T_1 \times 3$								$T_1 \times 3$										
Norminal Input Speed	S_1	rpm	2000								2000										
Maximum Input Speed	S_2	rpm	4000								4000										
Maximum Output Torque	T_4	Nm	$T_1 \times 3 \times 60\%$								$T_1 \times 3 \times 60\%$										
Maximum Radial Force	F_a	N	48700								48700										
Maximum Axial Force	F_b	N	18000								18000										
Torsional Rigidity	-	Nm/arcmin	225								225										
Effciency	η	%	⩾97								⩾94										
Service Life	–	h	20000								20000										
Noise	–	dB	⩽70								⩽70										
Weight	–	Kg	53								66										
Backlash	P0	arcmin	-								-										
	P1		⩽3								⩽5										
	P2		⩽5								⩽7										
Operating Temperature	–	℃	-20~90								-20~90										
Lubrication	–		Synthetic Grease								Synthetic Grease										
Protection Class	–		IP65								IP65										
Mounting Position	–		Any Direction								Any Direction										
Moment of Inertia	J	kg.cm²	69.61	54.37	53.27	51.72	50.97	50.84	–	50.56	23.29					22.51					

Notes:

- Speed ratio (i=Sin/Sout)
- When the output speed is 100 rpm, it acts on the center of the output shaft.
- For continous operation, the service life is no lessthan 10,000 hours.
- The noise value was measured based on the input rotational speed of 3000 rpm, i=10.

Any product models and parameters in this sample are subject to change without prior notice. Please confirm with the company before ordering.

TER070 Series

TER070 One Stage

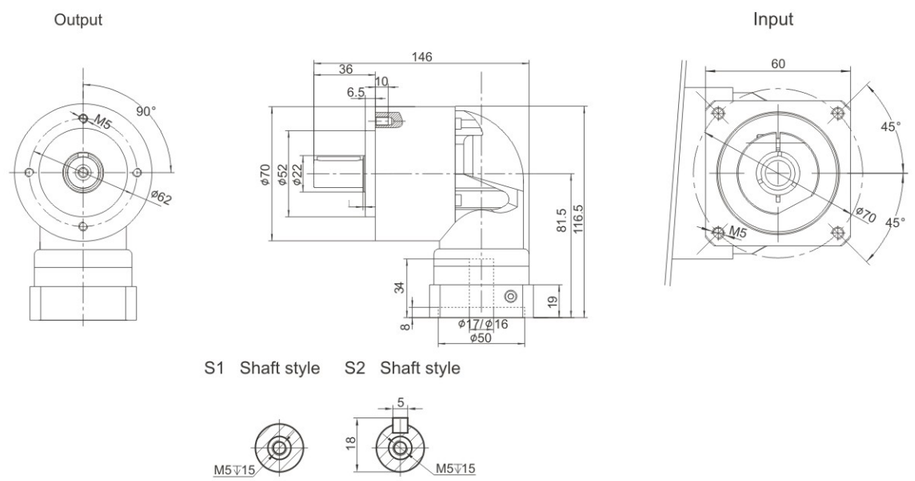

TER070 Two Stage

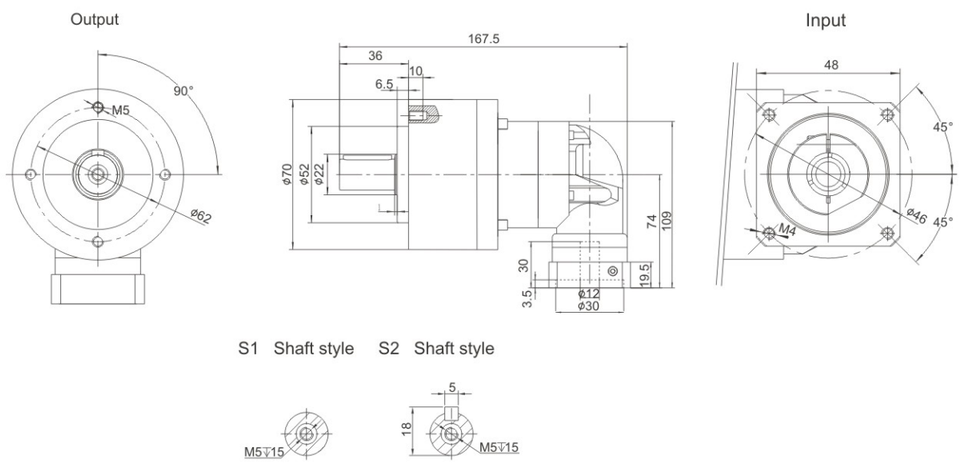

Performance Data

TER series offer additional installation flexibility in addition to TB series but with zero compromise in performance. It is with high precision and robust design.

TER070			One Stage																								Two Stage
Speed Ratio		i	3	4	5	6	7	8	9	10	14	20	25	30	35	40	50	60	70	80	100	120	140	160	180	200	
Norminal Output Torque	T_1	Nm	36	48	60	55	50	45	-	40	42	40	60	55	50	45	60	55	50	45	40	50	55	55	-	40	
Emergency Stop Torque	T_2	Nm	$T_1 \times 3$										$T_1 \times 3$														
Norminal Input Speed	S_1	rpm	5000										5000														
Maximum Input Speed	S_2	rpm	10000										10000														
Maximum Output Torque	T_4	Nm	$T_1 \times 3 \times 60\%$										$T_1 \times 3 \times 60\%$														
Maximum Radial Force	F_a	N	1377										1377														
Maximum Axial Force	F_b	N	765										765														
Torsional Rigidity	–	Nm/arcmin	7										7														
Effciency	η	%	⩾95										⩾92														
Service Life	–	h	20000										20000														
Noise	–	dB	⩽63										⩽63														
Weight	–	Kg	2.1										2.4														
Backlash	P0	arcmin	–										–														
	P1		⩽4										⩽7														
	P2		⩽6										⩽9														
Operating Temperature	–	℃	-20~90										-20~90														
Lubrication	–		Synthetic Grease										Synthetic Grease														
Protection Class	–		IP65										IP65														
Mounting Position	–		Any Direction										Any Direction														
Moment of Inertia	J	kg.cm²	0.35							0.07			0.09														

Notes:

- Speed ratio (i=Sin/Sout)
- When the output speed is 100 rpm, it acts on the center of the output shaft.
- For continous operation, the service life is no lessthan 10,000 hours.
- The noise value was measured based on the input rotational speed of 3000 rpm, i=10.

Any product models and parameters in this sample are subject to change without prior notice. Please confirm with the company before ordering.

TER090 Series

TER090 One Stage

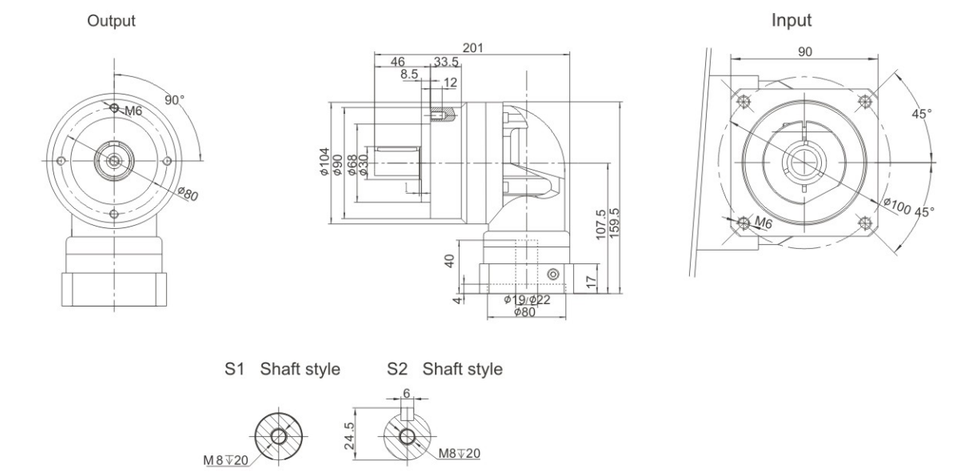

TER090 Two Stage

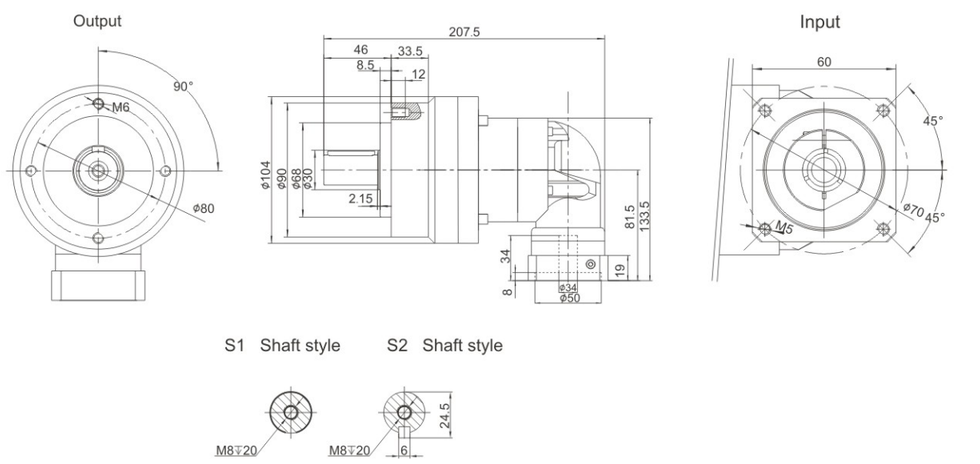

Performance Data

TER series offer additional installation flexibility in addition to TB series but with zero compromise in performance. It is with high precision and robust design.

TER090			One Stage																											
Speed Ratio	i		3	4	5	6	7	8	9	10	14	20	25	30	35	40	50	60	70	80	100	120	140	160	180	200				
Norminal Output Torque	T_1	Nm	90	120	150	150	140	120	-	100	140	100	150	150	140	120	100	150	140	120	100	150	140	120	-	100				
Emergency Stop Torque	T_2	Nm	$T_1 \times 3$																$T_1 \times 3$											
Norminal Input Speed	S_1	rpm	4000																4000											
Maximum Input Speed	S_2	rpm	8000																8000											
Maximum Output Torque	T_4	Nm	$T_1 \times 3 \times 60\%$																$T_1 \times 3 \times 60\%$											
Maximum Radial Force	F_a	N	2985																2985											
Maximum Axial Force	F_b	N	1625																1625											
Torsional Rigidity	–	Nm/arcmin	14																14											
Effciency	η	%	≥95																≥92											
Service Life	–	h	20000																20000											
Noise	–	dB	≤65																≤65											
Weight	–	Kg	5.8																4.6											
Backlash	P0	arcmin	–																–											
	P1		≤4																≤7											
	P2		≤6																≤9											
Operating Temperature	–	℃	-20~90																-20~90											
Lubrication	–		Synthetic Grease																Synthetic Grease											
Protection Class	–		IP65																IP65											
Mounting Position	–		Any Direction																Any Direction											
Moment of Inertia	J	kg.cm²	2.25								1.87								0.35								0.31			

Notes:

- Speed ratio (i=Sin/Sout)
- When the output speed is 100 rpm, it acts on the center of the output shaft.
- For continous operation, the service life is no lessthan 10,000 hours.
- The noise value was measured based on the input rotational speed of 3000 rpm, i=10.

Any product models and parameters in this sample are subject to change without prior notice. Please confirm with the company before ordering.

TER Series - High Precision Planetary Reducer

TER120 Series

TER120 One Stage

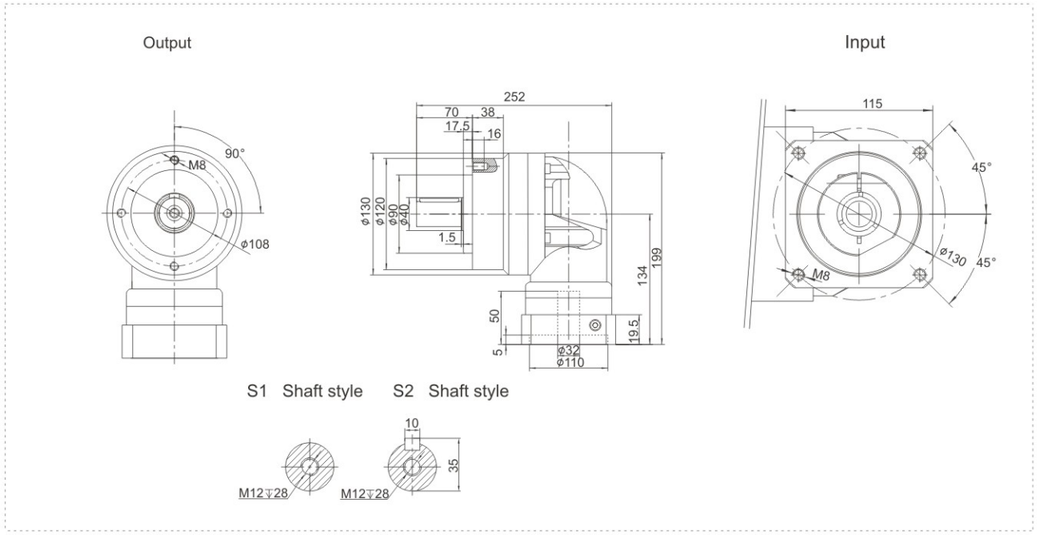

TER120 One Stage

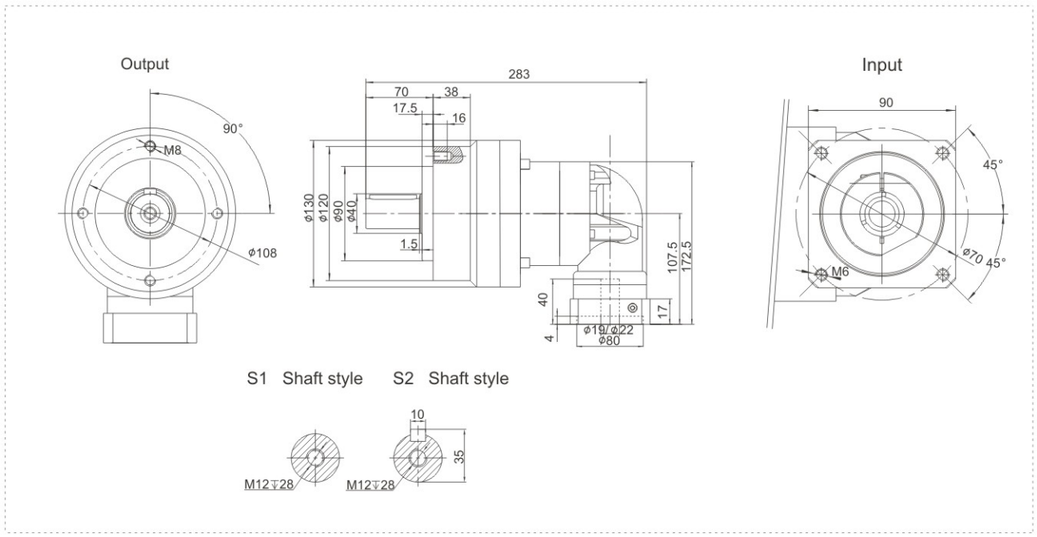

Performance Data

TER series offer additional installation flexibility in addition to TB series but with zero compromise in performance. It is with high precision and robust design.

TER120			One Stage																											
Speed Ratio		i	3	4	5	6	7	8	9	10	14	20	25	30	35	40	50	60	70	80	100	120	140	160	180	200				
Norminal Output Torque	T_1	Nm	195	260	325	310	300	260	-	230	300	230	325	310	300	260	230	310	300	260	230	310	300	260	-	230				
Emergency Stop Torque	T_2	Nm	$T_1 \times 3$													$T_1 \times 3$														
Norminal Input Speed	S_1	rpm	4000													4000														
Maximum Input Speed	S_2	rpm	8000													8000														
Maximum Output Torque	T_4	Nm	$T_1 \times 3 \times 60\%$													$T_1 \times 3 \times 60\%$														
Maximum Radial Force	F_a	N	6100													6100														
Maximum Axial Force	F_b	N	3350													3350														
Torsional Rigidity	–	Nm/arcmin	25													25														
Effciency	η	%	≥95													≥92														
Service Life	–	h	20000													20000														
Noise	–	dB	≤68													≤68														
Weight	–	Kg	11.2													11.1														
Backlash	P0	arcmin	–													–														
	P1		≤4													≤7														
	P2		≤6													≤9														
Operating Temperature	–	℃	-20~90													-20~90														
Lubrication	–		Synthetic Grease													Synthetic Grease														
Protection Class	–		IP65													IP65														
Mounting Position	–		Any Direction													Any Direction														
Moment of Inertia	J	kg.cm²	6.84							6.25						2.25													1.87	

Notes:

- Speed ratio (i=Sin/Sout)
- When the output speed is 100 rpm, it acts on the center of the output shaft.
- For continous operation, the service life is no lessthan 10,000 hours.
- The noise value was measured based on the input rotational speed of 3000 rpm, i=10.

Any product models and parameters in this sample are subject to change without prior notice. Please confirm with the company before ordering.

TER Series - High Precision Planetary Reducer

TER155 Series

TER155 One Stage

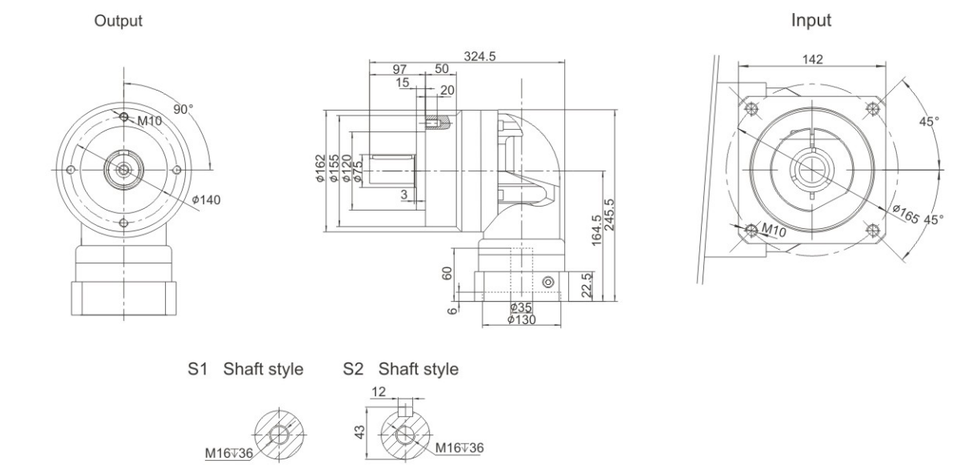

TER155 Two Stage

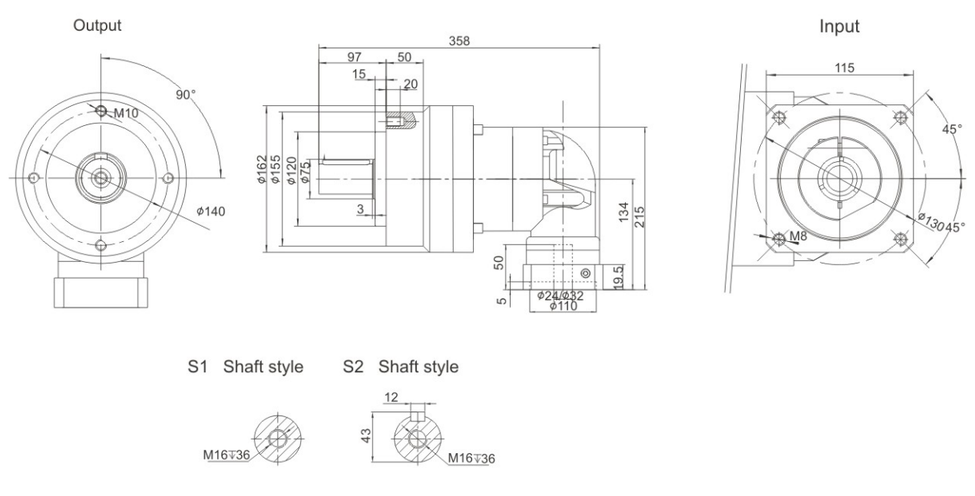

Performance Data

TER series offer additional installation flexibility in addition to TB series but with zero compromise in performance. It is with high precision and robust design.

TER155			One Stage																									Two Stage			
Speed Ratio	i		3	4	5	6	7	8	9	10	14	20	25	30	35	40	50	60	70	80	100	120	140	160	180	200					
Norminal Output Torque	T_1	Nm	342	520	650	600	550	500	-	450	550	450	650	600	550	500	650	600	550	500	450	600	550	550	-	450					
Emergency Stop Torque	T_2	Nm	$T_1 \times 3$																$T_1 \times 3$												
Norminal Input Speed	S_1	rpm	3000																3000												
Maximum Input Speed	S_2	rpm	6000																6000												
Maximum Output Torque	T_4	Nm	$T_1 \times 3 \times 60\%$																$T_1 \times 3 \times 60\%$												
Maximum Radial Force	F_a	N	8460																8460												
Maximum Axial Force	F_b	N	4700																4700												
Torsional Rigidity	–	Nm/arcmin	50																50												
Effciency	η	%	⩾95																⩾92												
Service Life	–	h	20000																20000												
Noise	–	dB	⩽70																⩽70												
Weight	–	Kg	22.4																21.8												
Backlash	P0	arcmin	–																–												
	P1		⩽4																⩽7												
	P2		⩽6																⩽9												
Operating Temperature	–	℃	-20~90																-20~90												
Lubrication	–		Synthetic Grease																Synthetic Grease												
Protection Class	–		IP65																IP65												
Mounting Position	–		Any Direction																Any Direction												
Moment of Inertia	J	kg.cm²	23.4							21.8									6.84											6.25	

Notes:

- Speed ratio (i=Sin/Sout)
- When the output speed is 100 rpm, it acts on the center of the output shaft.
- For continous operation, the service life is no lessthan 10,000 hours.
- The noise value was measured based on the input rotational speed of 3000 rpm, i=10.

Any product models and parameters in this sample are subject to change without prior notice. Please confirm with the company before ordering.

TER Series - High Precision Planetary Reducer

TER205 Series

TER205 One Stage

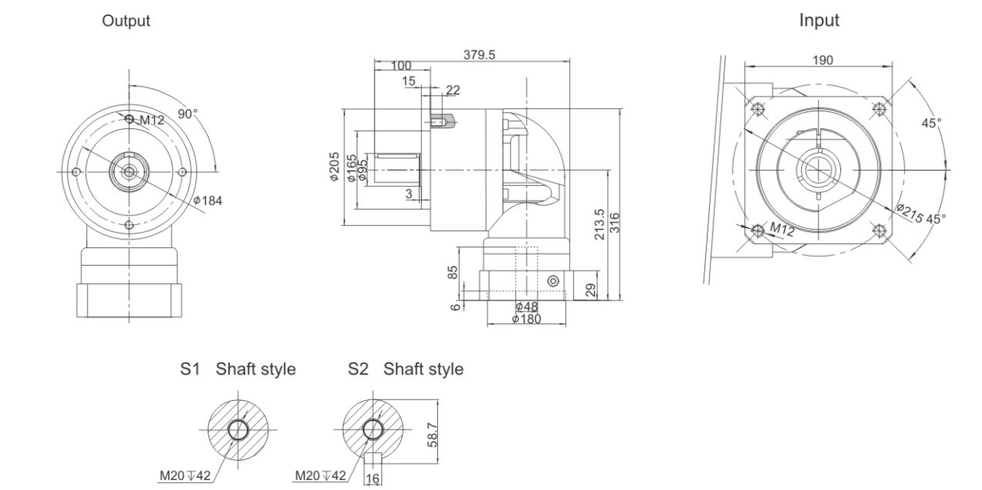

TER205 Two Stage

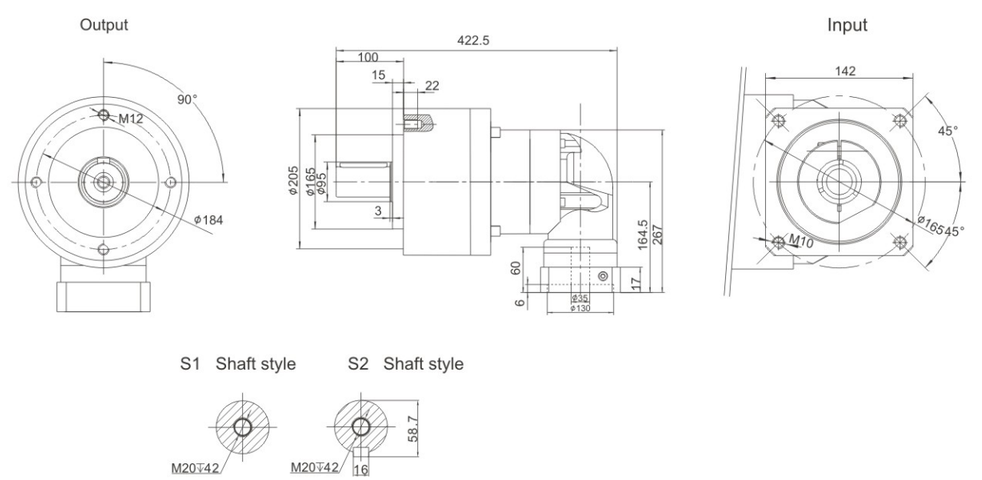

Performance Data

TER series offer additional installation flexibility in addition to TB series but with zero compromise in performance. It is with high precision and robust design.

| TER205 | | | One Stage | | |

Precision Planetary Reducer

High-end Structure Design

+

TF SERIES

+

Premium Performance

TF series planetary reducer has the characteristics of high rigidity, high precision (single stage can achieve less than 1 arcmin), high transmission efficiency (single stage at 97% -98%), high torque / volume ratio, and lifetime maintenance-free.

GEARKO

DRIVES THE PRECISION

TF Series - High-end Design and Premium Performance

TF060 Series

TF060 One Stage

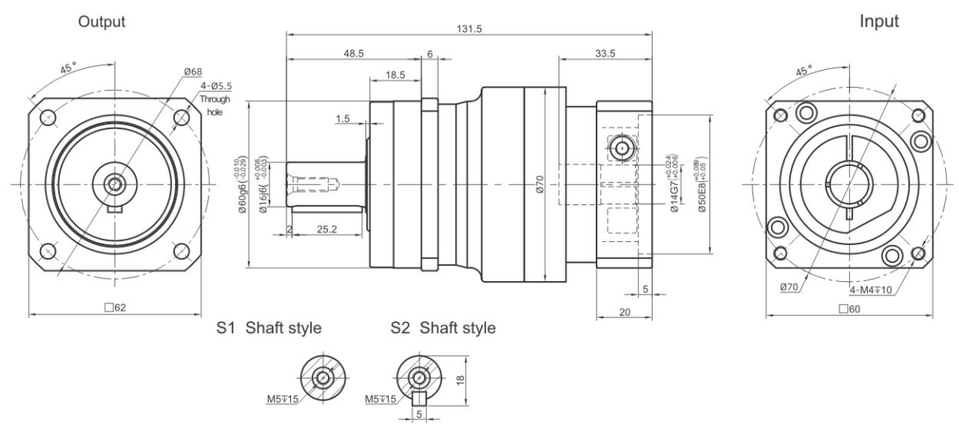

TF060 Two Stage

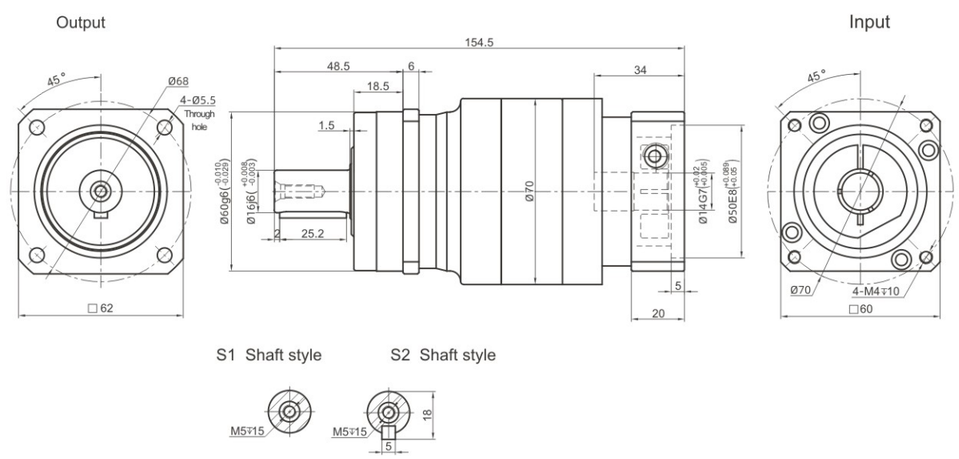

Performance Data

The TF series reducer targets those applications requiring extremely smooth operation even at high axial or radial load at high speed. The enhanced load bearing capacity guarantees its design precision at almost any demanding condition.

TF060			One Stage								Two Stage										
Speed Ratio	i		3	4	5	6	7	8	9	10	15	20	25	30	35	40	50	60	70	80	100
Norminal Output Torque	T_1	Nm	55	50	60	55	50	45	-	40	55	50	60	55	50	45	60	55	50	45	40
Emergency Stop Torque	T_2	Nm	T1×3								T1×3										
Norminal Input Speed	S_1	rpm	5000								5000										
Maximum Input Speed	S_2	rpm	10000								10000										
Maximum Output Torque	T_4	Nm	T1×3×60%								T1×3×60%										
Maximum Radial Force	F_a	N	1400								1400										
Maximum Axial Force	F_b	N	1100								1100										
Torsional Rigidity	–	Nm/arcmin	7								7										
Effciency	η	%	⩾97								⩾94										
Service Life	–	h	30000								30000										
Noise	–	dB	⩽58								⩽60										
Weight	–	Kg	1.3								2										
Backlash	P0	arcmin	-								-										
	P1		⩽3								⩽5										
	P2		⩽5								⩽7										
Operating Temperature	–	℃	-20~90								-20~90										
Lubrication	–		Synthetic Grease								Synthetic Grease										
Protection Class	–		IP65								IP65										
Mounting Position	–		Any Direction								Any Direction										
Moment of Inertia	J	kg.cm²	0.16	0.14	0.13						0.13										

Notes:

- Speed ratio (i=Sin/Sout)
- When the output speed is 100 rpm, it acts on the center of the output shaft.
- For continous operation, the service life is no lessthan 10,000 hours.
- The noise value was measured based on the input rotational speed of 3000 rpm, i=10.

Any product models and parameters in this sample are subject to change without prior notice. Please confirm with the company before ordering.

TF075 Series

TF075 One Stage

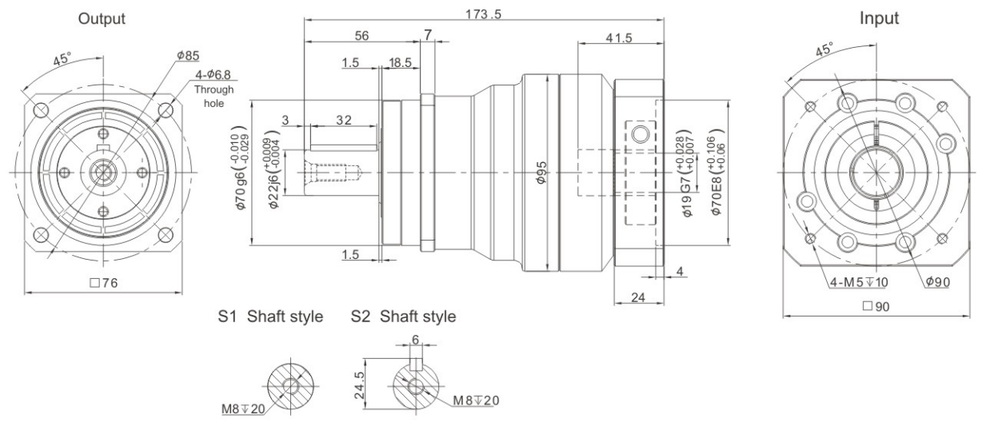

TF075 Two Stage

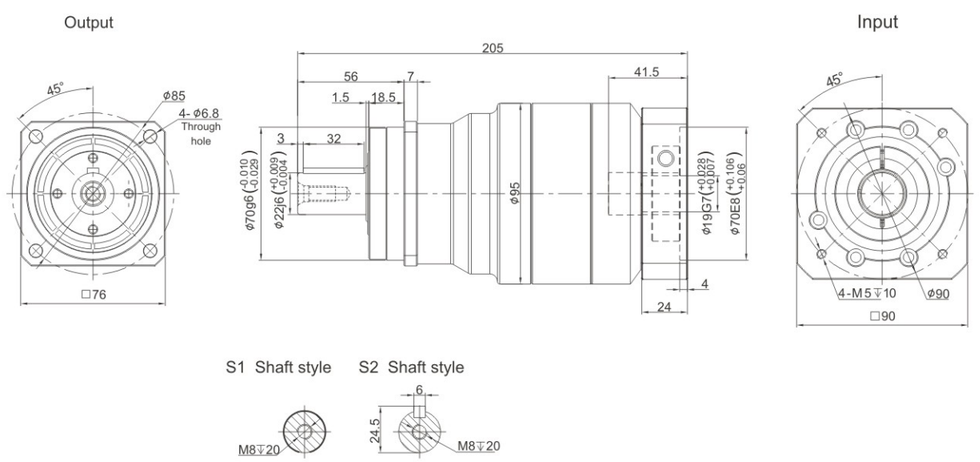

Performance Data

The TF series reducer targets those applications requiring extremely smooth operation even at high axial or radial load at high speed. The enhanced load bearing capacity guarantees its design precision at almost any demanding condition.

TF075			One Stage								Two Stage										
Speed Ratio		i	3	4	5	6	7	8	9	10	15	20	25	30	35	40	50	60	70	80	100
Norminal Output Torque	T_1	Nm	130	140	160	150	140	120	-	100	130	140	160	150	140	120	160	150	140	120	100
Emergency Stop Torque	T_2	Nm	$T_1 \times 3$								$T_1 \times 3$										
Norminal Input Speed	S_1	rpm	4000								4000										
Maximum Input Speed	S_2	rpm	8000								8000										
Maximum Output Torque	T_4	Nm	$T_1 \times 3 \times 60\%$								$T_1 \times 3 \times 60\%$										
Maximum Radial Force	F_a	N	4100								4100										
Maximum Axial Force	F_b	N	3700								3700										
Torsional Rigidity	–	Nm/arcmin	14								14										
Effciency	η	%	⩾97								⩾94										
Service Life	–	h	30000								30000										
Noise	–	dB	⩽60								⩽60										
Weight	–	Kg	3.7								5.1										
Backlash	P0	arcmin	⩽1								–										
	P1		⩽3								⩽5										
	P2		⩽5								⩽7										
Operating Temperature	–	℃	-20~90								-20~90										
Lubrication	–		Synthetic Grease								Synthetic Grease										
Protection Class	–		IP65								IP65										
Mounting Position	–		Any Direction								Any Direction										
Moment of Inertia	J	kg.cm²	0.61	0.48	0.47	0.45		0.44			0.47							0.44			

Notes:

- Speed ratio (i=Sin/Sout)
- When the output speed is 100 rpm, it acts on the center of the output shaft.
- For continous operation, the service life is no lessthan 10,000 hours.
- The noise value was measured based on the input rotational speed of 3000 rpm, i=10.

Any product models and parameters in this sample are subject to change without prior notice. Please confirm with the company before ordering.

TF Series - High-end Design and Premium Performance

TF100 Series

TF100 One Stage

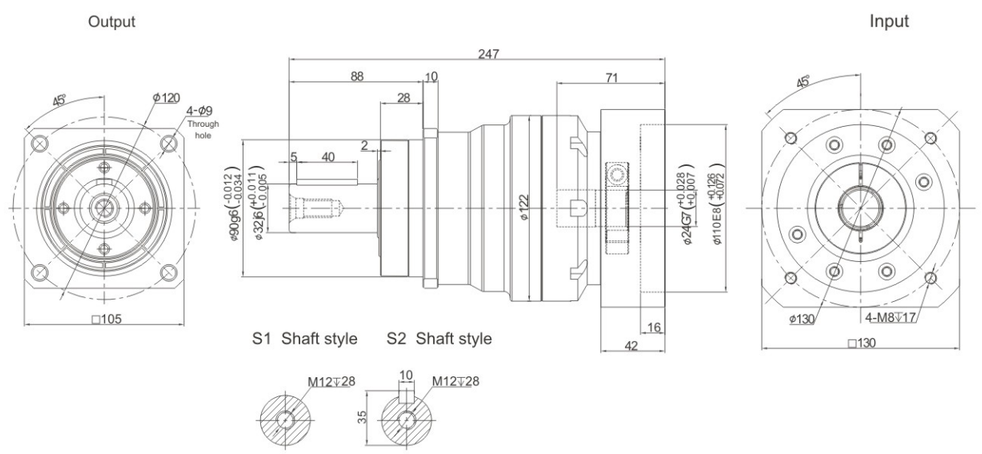

TF100 Two Stage

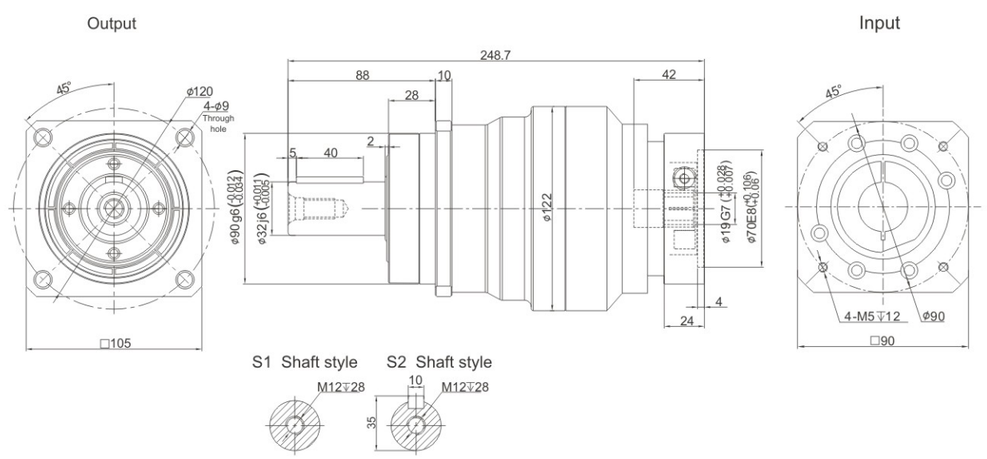

Performance Data

The TF series reducer targets those applications requiring extremely smooth operation even at high axial or radial load at high speed. The enhanced load bearing capacity guarantees its design precision at almost any demanding condition.

TF100			One Stage								Two Stage										
Speed Ratio	i		3	4	5	6	7	8	9	10	15	20	25	30	35	40	50	60	70	80	100
Norminal Output Torque	T_1	Nm	208	290	330	310	300	260	-	230	208	290	330	310	300	260	330	310	300	260	230
Emergency Stop Torque	T_2	Nm	$T_1 \times 3$								$T_1 \times 3$										
Norminal Input Speed	S_1	rpm	4000								4000										
Maximum Input Speed	S_2	rpm	8000								8000										
Maximum Output Torque	T_4	Nm	$T_1 \times 3 \times 60\%$								$T_1 \times 3 \times 60\%$										
Maximum Radial Force	F_a	N	9200								9200										
Maximum Axial Force	F_b	N	5820								5820										
Torsional Rigidity	–	Nm/arcmin	25								25										
Effciency	η	%	≥97								≥94										
Service Life	–	h	30000								30000										
Noise	–	dB	≤63								≤63										
Weight	–	Kg	6.9								8.1										
Backlash	P0	arcmin	≤1								≤3										
	P1		≤3								≤5										
	P2		≤5								≤7										
Operating Temperature	–	℃	-20~90								-20~90										
Lubrication	–		Synthetic Grease								Synthetic Grease										
Protection Class	–		IP65								IP65										
Mounting Position	–		Any Direction								Any Direction										
Moment of Inertia	J	kg.cm²	3.25	2.74	2.71	2.65	2.62	2.58	–	2.57	0.47						0.44				

Notes:

- Speed ratio (i=Sin/Sout)
- When the output speed is 100 rpm, it acts on the center of the output shaft.
- For continous operation, the service life is no lessthan 10,000 hours.
- The noise value was measured based on the input rotational speed of 3000 rpm, i=10.

Any product models and parameters in this sample are subject to change without prior notice. Please confirm with the company before ordering.

TF Series - High-end Design and Premium Performance

TF140 Series

TF140 One Stage

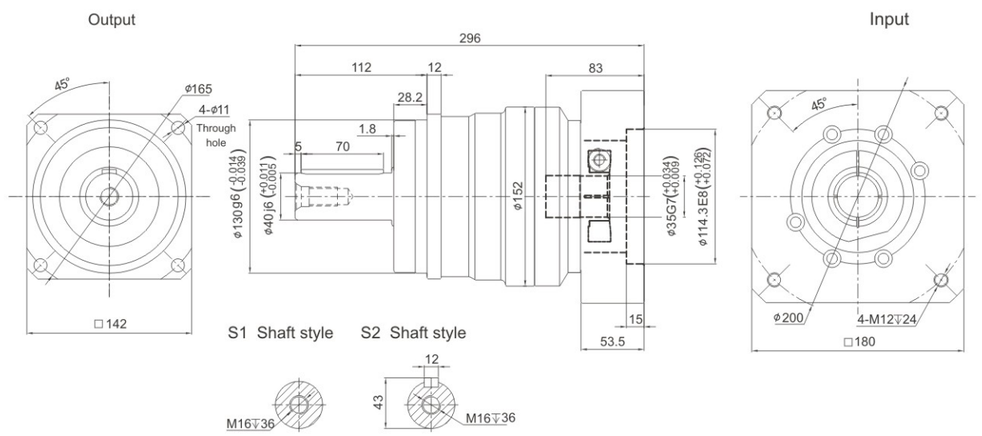

TF140 Two Stage

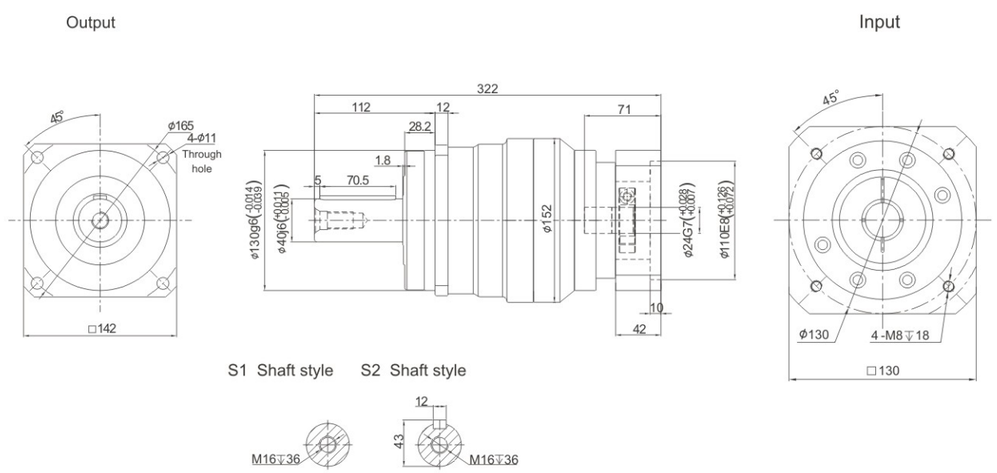

Performance Data

The TF series reducer targets those applications requiring extremely smooth operation even at high axial or radial load at high speed. The enhanced load bearing capacity guarantees its design precision at almost any demanding condition.

TF140			One Stage								Two Stage										
Speed Ratio	i		3	4	5	6	7	8	9	10	15	20	25	30	35	40	50	60	70	80	100
Norminal Output Torque	T_1	Nm	342	542	650	600	550	500	–	450	342	542	650	600	550	500	650	600	550	500	450
Emergency Stop Torque	T_2	Nm	$T_1 \times 3$								$T_1 \times 3$										
Norminal Input Speed	S_1	rpm	3000								3000										
Maximum Input Speed	S_2	rpm	6000								6000										
Maximum Output Torque	T_4	Nm	$T_1 \times 3 \times 60\%$								$T_1 \times 3 \times 60\%$										
Maximum Radial Force	F_a	N	14000								14000										
Maximum Axial Force	F_b	N	11400								11400										
Torsional Rigidity	–	Nm/arcmin	50								50										
Effciency	η	%	⩾97								⩾94										
Service Life	–	h	30000								30000										
Noise	–	dB	⩽65								⩽65										
Weight	–	Kg	13.7								16.6										
Backlash	P0	arcmin	⩽1								⩽3										
	P1		⩽3								⩽5										
	P2		⩽5								⩽7										
Operating Temperature	–	℃	-20~90								-20~90										
Lubrication	–		Synthetic Grease								Synthetic Grease										
Protection Class	–		IP65								IP65										
Mounting Position	–		Any Direction								Any Direction										
Moment of Inertia	J	kg.cm²	9.2	7.5	7.4	7.2	7.1	7.0	-	7.0	2.71						2.57				

Notes:

- Speed ratio (i=Sin/Sout)
- When the output speed is 100 rpm, it acts on the center of the output shaft.
- For continous operation, the service life is no lessthan 10,000 hours.
- The noise value was measured based on the input rotational speed of 3000 rpm, i=10.

Any product models and parameters in this sample are subject to change without prior notice. Please confirm with the company before ordering.

Precision Planetary Reducer

Modular & Economical Design

+

TCB/TCBR/TCE SERIES

+

Optimized Performance

TCB/TCBR/TCE series planetary reducer backlash is low and its transmission capacity is strong, the input end can be matched with servo, stepping and any other motors.

GEARKO

DRIVES THE PRECISION

TCB042 Series

TCB042 One Stage

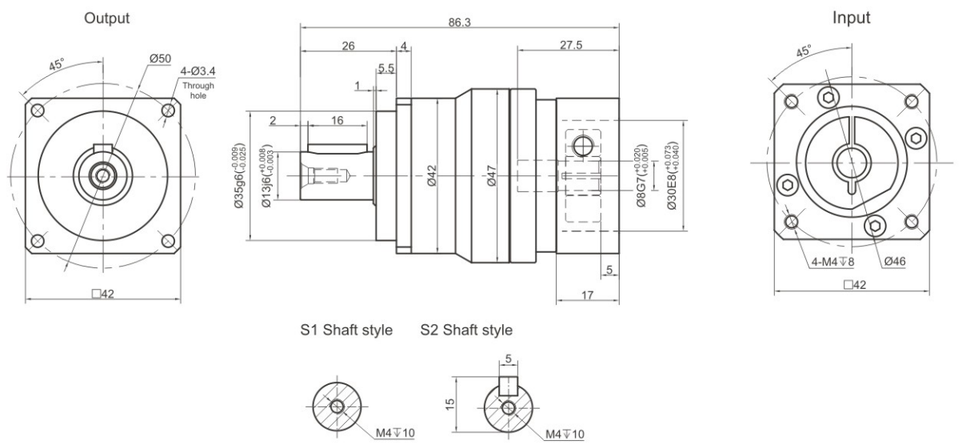

TCB042 Two Stage

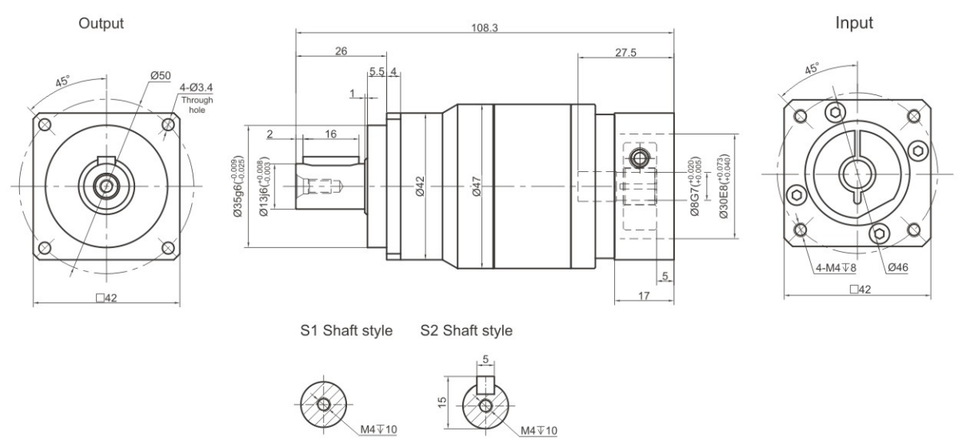

Performance Data

TCB series planetary reducer has modular design compact structure with high reliability and efficiency.
It is a perfect optimization of both performance and cost.

TCB042			One Stage								Two Stage									
Speed Ratio	i		-	4	5	6	7	8	9	10	-	20	25	30	35	40	50	60	70	80	100
Norminal Output Torque	T_1	Nm	-	17	19	18	19	16	-	14	-	17	19	18	18	16	19	18	18	16	14
Emergency Stop Torque	T_2	Nm	T1×3								T1×3										
Norminal Input Speed	S_1	rpm	3000								3000										
Maximum Input Speed	S_2	rpm	6000								6000										
Maximum Output Torque	T_4	Nm	T1×3×60%								T1×3×60%										
Maximum Radial Force	F_a	N	760								760										
Maximum Axial Force	F_b	N	380								380										
Torsional Rigidity	–	Nm/arcmin	3								3										
Efficiency	η	%	⩾97								⩾94										
Service Life	–	h	20000								20000										
Noise	–	dB	⩽56								⩽56										
Weight	–	Kg	0.6								0.8										
Backlash	P0	arcmin	–								–										
	P1		⩽3								⩽5										
	P2		⩽5								⩽7										
Operating Temperature	–	℃	-20~90								-20~90										
Lubrication	–		Synthetic Grease								Synthetic grease										
Protection Class	–		IP65								IP65										
Mounting Position	–		Any Direction								Any Direction										
Moment of Inertia	J	kg.cm²	0.03								0.03										

Notes:

- Speed ratio (i=Sin/Sout)
- When the output speed is 100 rpm, it acts on the center of the output shaft.
- For continous operation, the service life is no lessthan 10,000 hours.
- The noise value was measured based on the input rotational speed of 3000 rpm, i=10.

Any product models and parameters in this sample are subject to change without prior notice. Please confirm with the company before ordering.

TCB060 Series

TCB060 One Stage

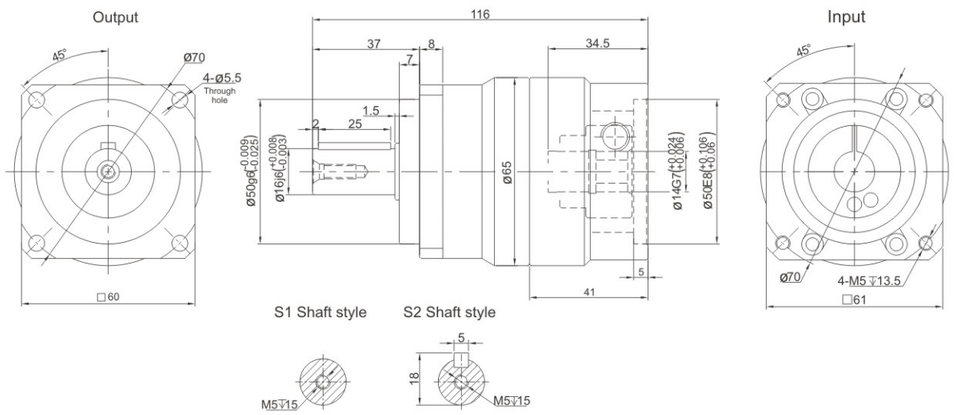

TCB060 Two Stage

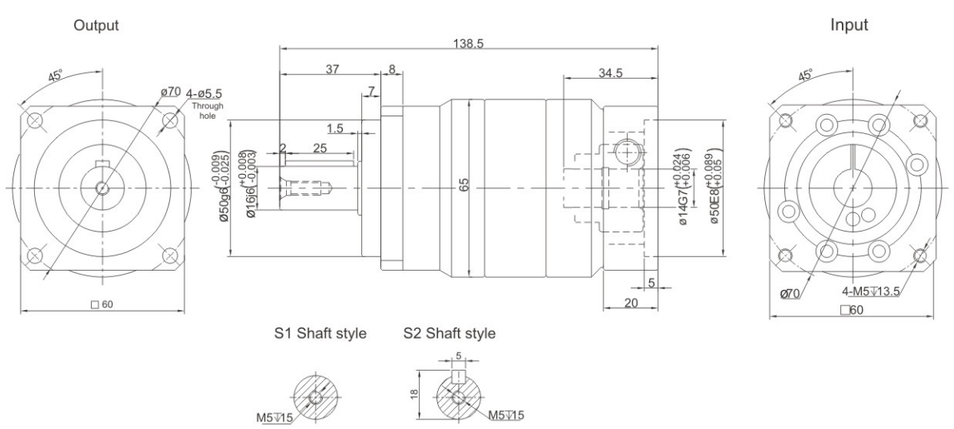

Performance Data

TCB series planetary reducer has modular design compact structure with high reliability and efficiency.
It is a perfect optimization of both performance and cost.

TCB060			One Stage								Two Stage										
Speed Ratio	i		3	4	5	6	7	8	9	10	15	20	25	30	35	40	50	60	70	80	100
Norminal Output Torque	T_1	Nm	40	45	55	50	45	45	-	35	40	45	55	50	45	45	55	50	45	45	35
Emergency Stop Torque	T_2	Nm	$T_1 \times 3$								$T_1 \times 3$										
Norminal Input Speed	S_1	rpm	3000								3000										
Maximum Input Speed	S_2	rpm	6000								6000										
Maximum Output Torque	T_4	Nm	$T_1 \times 3 \times 60\%$								$T_1 \times 3 \times 60\%$										
Maximum Radial Force	F_a	N	1530								1530										
Maximum Axial Force	F_b	N	765								765										
Torsional Rigidity	–	Nm/arcmin	7								7										
Effciency	η	%	⩾97								⩾94										
Service Life	–	h	20000								20000										
Noise	–	dB	⩽58								⩽58										
Weight	–	Kg	1.3								1.9										
Backlash	P0	arcmin	–								–										
	P1		⩽3								⩽5										
	P2		⩽5								⩽7										
Operating Temperature	–	℃	-20~90								-20~90										
Lubrication	–		Synthetic Grease								Synthetic grease										
Protection Class	–		IP65								IP65										
Mounting Position	–		Any Direction								Any Direction										
Moment of Inertia	J	kg.cm²	0.16	0.14	0.13						0.13										

Notes:

- Speed ratio (i=Sin/Sout)
- When the output speed is 100 rpm, it acts on the center of the output shaft.
- For continous operation, the service life is no lessthan 10,000 hours.
- The noise value was measured based on the input rotational speed of 3000 rpm, i=10.

Any product models and parameters in this sample are subject to change without prior notice. Please confirm with the company before ordering.

TCB090 Series

TCB090 One Stage

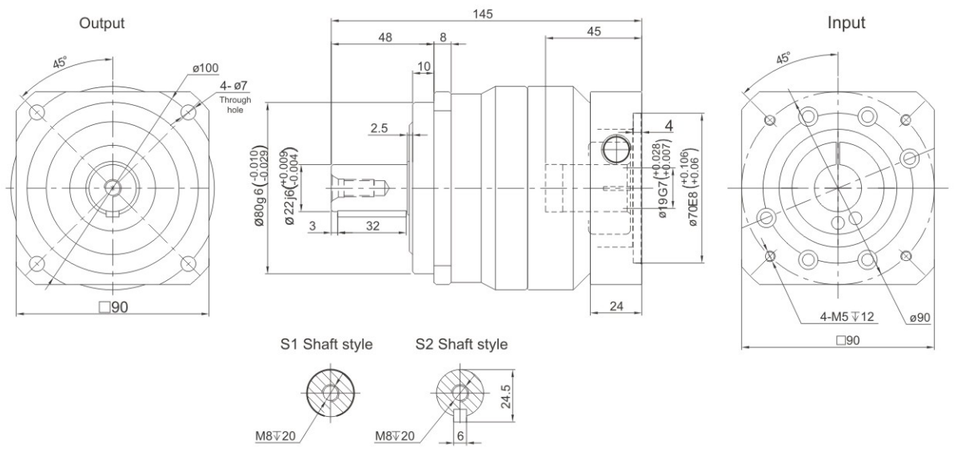

TCB090 Two Stage

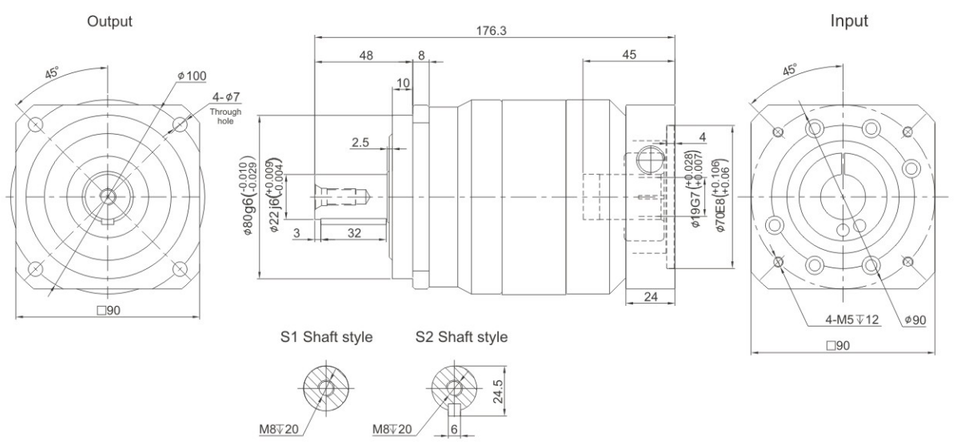

Performance Data

TCB series planetary reducer has modular design compact structure with high reliability and efficiency.
It is a perfect optimization of both performance and cost.

TCB090			One Stage								Two Stage										
Speed Ratio	i		3	4	5	6	7	8	9	10	15	20	25	30	35	40	50	60	70	80	100
Norminal Output Torque	T_1	Nm	100	110	150	140	135	120	-	100	100	110	150	140	135	120	150	140	135	120	100
Emergency Stop Torque	T_2	Nm	$T_1 \times 3$								$T_1 \times 3$										
Norminal Input Speed	S_1	rpm	3000								3000										
Maximum Input Speed	S_2	rpm	6000								6000										
Maximum Output Torque	T_4	Nm	$T_1 \times 3 \times 60\%$								$T_1 \times 3 \times 60\%$										
Maximum Radial Force	F_a	N	3250								3250										
Maximum Axial Force	F_b	N	1625								1625										
Torsional Rigidity	–	Nm/arcmin	14								14										
Effciency	η	%	≥97								≥94										
Service Life	–	h	20000								20000										
Noise	–	dB	≤60								60										
Weight	–	Kg	3.6								5.1										
Backlash	P0	arcmin	–								–										
	P1		≤3								≤5										
	P2		≤5								≤7										
Operating Temperature	–	℃	-20~90								-20~90										
Lubrication	–		Synthetic Grease								Synthetic grease										
Protection Class	–		IP65								IP65										
Mounting Position	–		Any Direction								Any Direction										
Moment of Inertia	J	kg.cm²	0.61	0.48	0.47	0.45	0.45	0.44	-	0.44	0.47									0.44	

Notes:

- Speed ratio (i=Sin/Sout)
- When the output speed is 100 rpm, it acts on the center of the output shaft.
- For continous operation, the service life is no lessthan 10,000 hours.
- The noise value was measured based on the input rotational speed of 3000 rpm, i=10.

Any product models and parameters in this sample are subject to change without prior notice. Please confirm with the company before ordering.

TCB120 Series

TCB120 One Stage

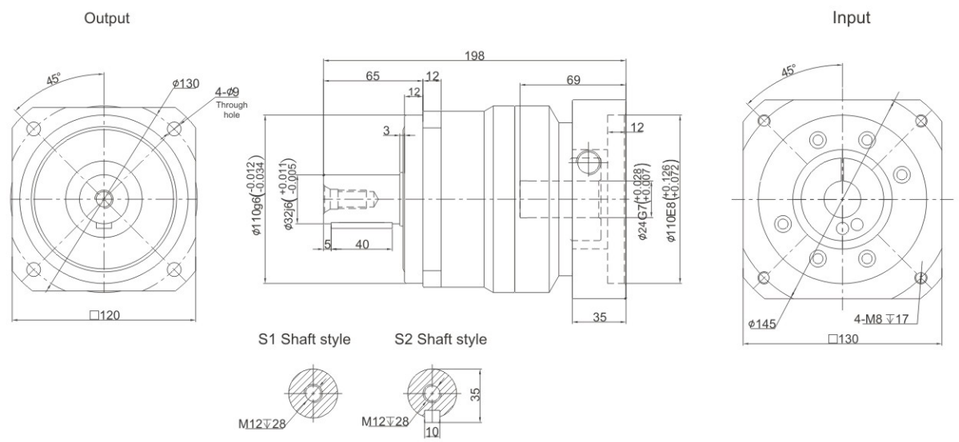

TCB120 Two Stage

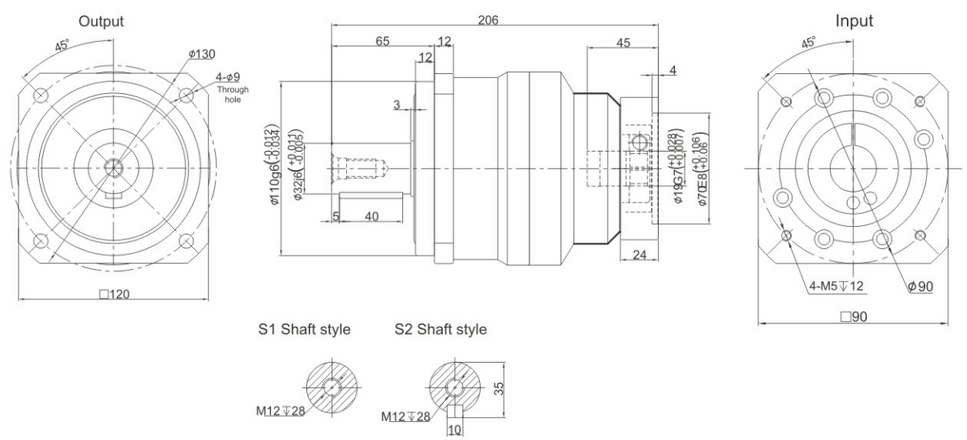

Performance Data

TCB series planetary reducer has modular design compact structure with high reliability and efficiency.
It is a perfect optimization of both performance and cost.

TCB120			One Stage								Two Stage										
Speed Ratio	i		3	4	5	6	7	8	9	10	15	20	25	30	35	40	50	60	70	80	100
Norminal Output Torque	T_1	Nm	200	280	320	310	300	255	-	220	200	280	320	310	300	255	320	310	300	255	220
Emergency Stop Torque	T_2	Nm	$T_1 \times 3$								$T_1 \times 3$										
Norminal Input Speed	S_1	rpm	3000								3000										
Maximum Input Speed	S_2	rpm	6000								6000										
Maximum Output Torque	T_4	Nm	$T_1 \times 3 \times 60\%$								$T_1 \times 3 \times 60\%$										
Maximum Radial Force	F_a	N	6700								6700										
Maximum Axial Force	F_b	N	3350								3350										
Torsional Rigidity	–	Nm/arcmin	25								25										
Efficiency	η	%	⩾97								⩾94										
Service Life	–	h	20000								20000										
Noise	–	dB	⩽63								⩽63										
Weight	–	Kg	7.7								9										
Backlash	P0	arcmin	–								–										
	P1		⩽3								⩽5										
	P2		⩽5								⩽7										
Operating Temperature	–	℃	-20~90								-20~90										
Lubrication	–		Synthetic Grease								Synthetic grease										
Protection Class	–		IP65								IP65										
Mounting Position	–		Any Direction								Any Direction										
Moment of Inertia	J	kg.cm²	3.25	2.74	2.71	2.65	2.62	2.58	-	2.57	0.47									0.44	

Notes:

- Speed ratio (i=Sin/Sout)
- When the output speed is 100 rpm, it acts on the center of the output shaft.
- For continous operation, the service life is no lessthan 10,000 hours.
- The noise value was measured based on the input rotational speed of 3000 rpm, i=10.

Any product models and parameters in this sample are subject to change without prior notice. Please confirm with the company before ordering.

TCB140 Series

TCB140 One Stage

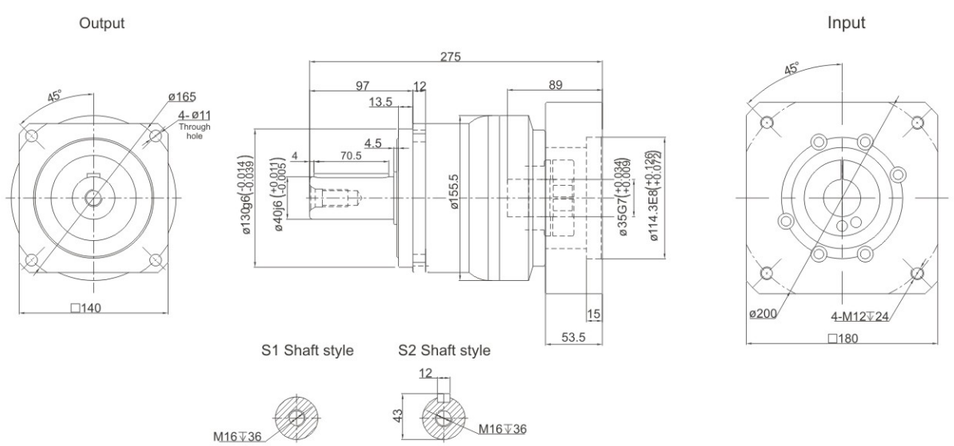

TCB140 Two Stage

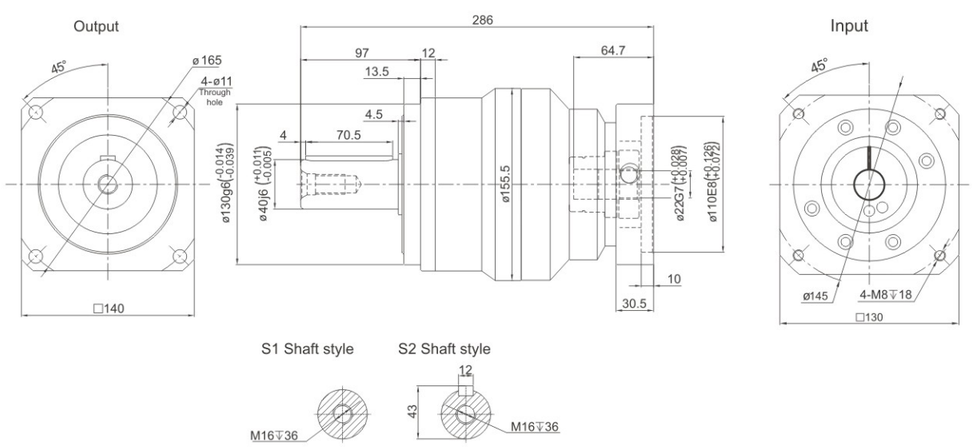

Performance Data

TCB series planetary reducer has modular design compact structure with high reliability and efficiency.
It is a perfect optimization of both performance and cost.

TCB140			One Stage								Two Stage										
Speed Ratio	i		3	4	5	6	7	8	9	10	15	20	25	30	35	40	50	60	70	80	100
Norminal Output Torque	T_1	Nm	340	535	650	600	550	500	-	445	340	535	650	600	550	500	650	600	550	500	445
Emergency Stop Torque	T_2	Nm	$T_1 \times 3$								$T_1 \times 3$										
Norminal Input Speed	S_1	rpm	2000								2000										
Maximum Input Speed	S_2	rpm	4000								4000										
Maximum Output Torque	T_4	Nm	$T_1 \times 3 \times 60\%$								$T_1 \times 3 \times 60\%$										
Maximum Radial Force	F_a	N	9400								9400										
Maximum Axial Force	F_b	N	4700								4700										
Torsional Rigidity	–	Nm/arcmin	50								50										
Effciency	η	%	⩾97								⩾94										
Service Life	–	h	20000								20000										
Noise	–	dB	⩽65								⩽65										
Weight	–	Kg	14.5								17.5										
Backlash	P0	arcmin	–								–										
	P1		⩽3								⩽5										
	P2		⩽5								⩽7										
Operating Temperature	–	℃	-20～90								-20～90										
Lubrication	–		Synthetic Grease								Synthetic grease										
Protection Class	–		IP65								IP65										
Mounting Position	–		Any Direction								Any Direction										
Moment of Inertia	J	kg.cm²	9.21	7.54	7.42	7.25	7.14	7.07	-	7.03	2.71						2.57				

Notes:

- Speed ratio (i=Sin/Sout)
- When the output speed is 100 rpm, it acts on the center of the output shaft.
- For continous operation, the service life is no lessthan 10,000 hours.
- The noise value was measured based on the input rotational speed of 3000 rpm, i=10.

Any product models and parameters in this sample are subject to change without prior notice. Please confirm with the company before ordering.

TCB180 Series

TCB180 One Stage

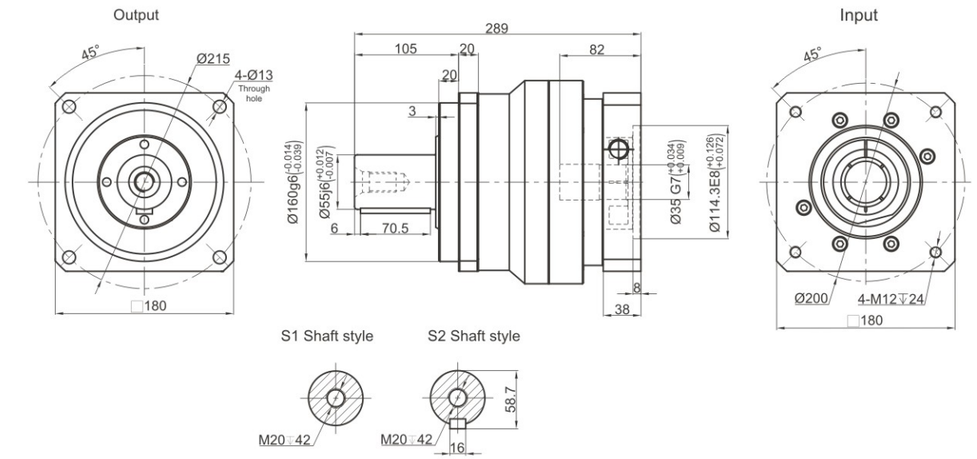

TCB180 Two Stage

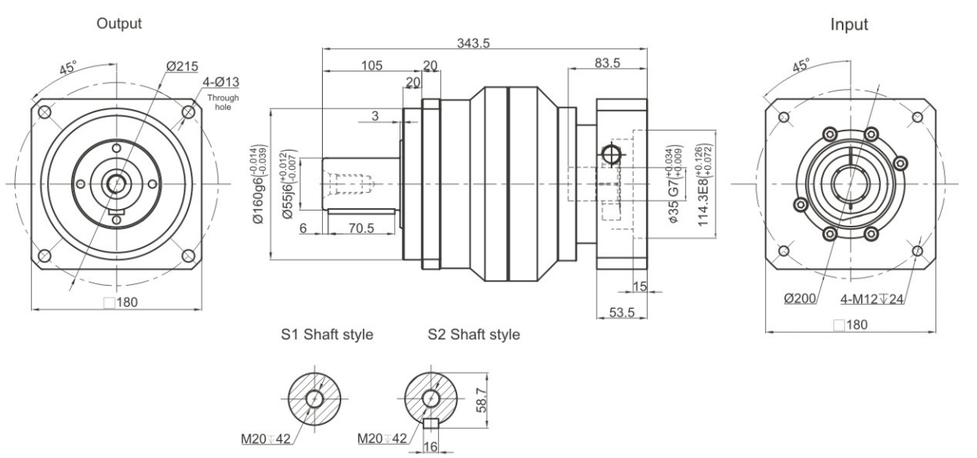

Performance Data

TCB series planetary reducer has modular design compact structure with high reliability and efficiency.
It is a perfect optimization of both performance and cost.

TCB180			One Stage								Two Stage										
Speed Ratio	i		3	4	5	6	7	8	9	10	15	20	25	30	35	40	50	60	70	80	100
Norminal Output Torque	T_1	Nm	580	1020	1180	1050	1050	970	-	870	580	1020	1180	1050	1050	970	1180	1050	1050	970	870
Emergency Stop Torque	T_2	Nm	T1×3								T1×3										
Norminal Input Speed	S_1	rpm	3000								3000										
Maximum Input Speed	S_2	rpm	4000								4000										
Maximum Output Torque	T_4	Nm	T1×3×60%								T1×3×60%										
Maximum Radial Force	F_a	N	14100								14100										
Maximum Axial Force	F_b	N	7050								7050										
Torsional Rigidity	–	Nm/arcmin	140								140										
Effciency	η	%	⩾97								⩾94										
Service Life	–	h	20000								20000										
Noise	–	dB	⩽67								⩽67										
Weight	–	Kg	29								33										
Backlash	P0	arcmin	–								–										
	P1		⩽6								⩽9										
	P2		⩽8								⩽12										
Operating Temperature	–	℃	-20~90								-20~90										
Lubrication	–		Synthetic Grease								Synthetic grease										
Protection Class	–		IP65								IP65										
Mounting Position	–		Any Direction								Any Direction										
Moment of Inertia	J	kg.cm²	28.98	23.67	23.29	22.75	22.48	22.59	-	22.51	7.42						7.03				

Notes:

- Speed ratio (i=Sin/Sout)
- When the output speed is 100 rpm, it acts on the center of the output shaft.
- For continous operation, the service life is no lessthan 10,000 hours.
- The noise value was measured based on the input rotational speed of 3000 rpm, i=10.

Any product models and parameters in this sample are subject to change without prior notice. Please confirm with the company before ordering.

TCBR042 Series

TCBR042 One Stage

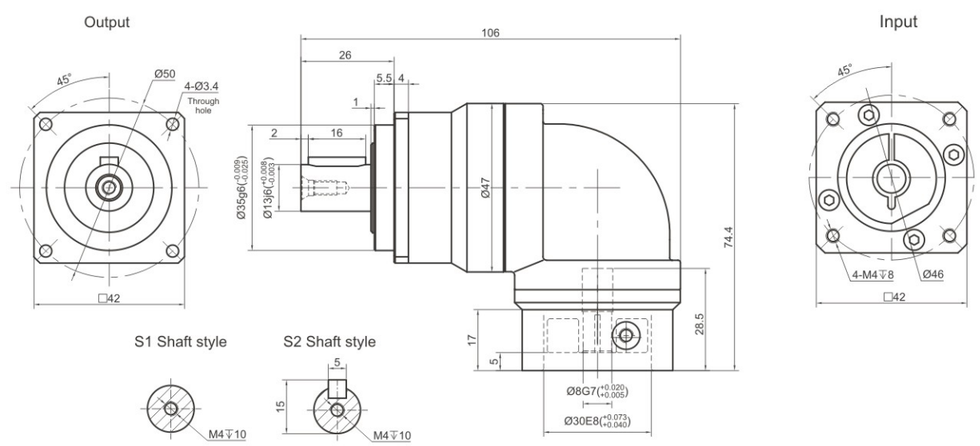

TCBR042 Two Stage

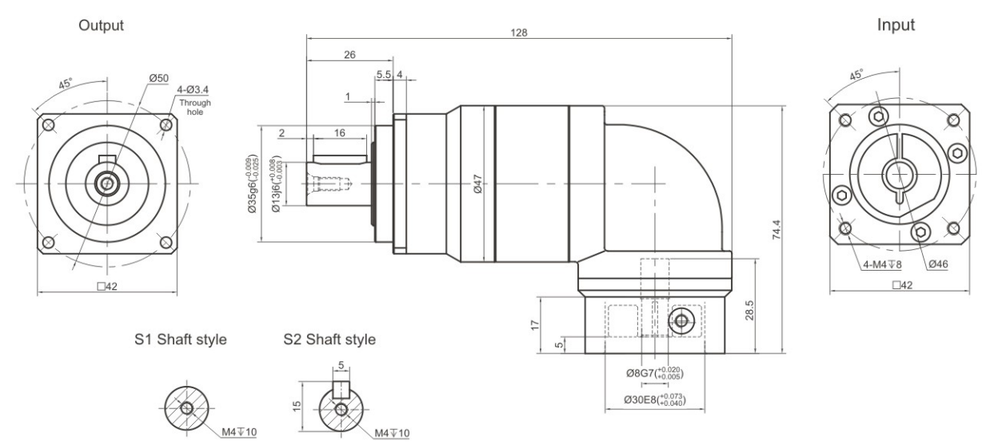

Performance Data

TCBR series planetary reducer has modular design compact structure with high reliability and efficiency.
It is a perfect optimization of both performance and cost.

TCBR042			One Stage											Two Stage											
Speed Ratio	i	-	4	5	6	7	8	10	12	14	16	20	25	30	35	40	50	60	70	80	100	120	140	160	200
Norminal Output Torque	T_1	Nm	-	11	13	16	17	15	13	16	17	15	13	13	16	17	15	13	16	17	15	13	-	-	-	-
Emergency Stop Torque	T_2	Nm	T1×3											T1×3											
Norminal Input Speed	S_1	rpm	3000											3000											
Maximum Input Speed	S_2	rpm	6000											6000											
Maximum Output Torque	T_4	Nm	T1×3×60%											T1×3×60%											
Maximum Radial Force	F_a	N	760											760											
Maximum Axial Force	F_b	N	380											380											
Torsional Rigidity	–	Nm/arcmin	3											3											
Effciency	η	%	⩾95											⩾92											
Service Life	–	h	20000											20000											
Noise	–	dB	⩽63											⩽63											
Weight	–	Kg	0.9											1.1											
Backlash	P0	arcmin	-											-											
	P1		⩽6											⩽9											
	P2		⩽8											⩽12											
Operating Temperature	–	℃	-20~90											-20~90											
Lubrication	–		Synthetic Grease											Synthetic grease											
Protection Class	–		IP65											IP65											
Mounting Position	–		Any Direction											Any Direction											
Moment of Inertia	J	$kg.cm^2$	0.09											0.09											

Notes:

- Speed ratio (i=Sin/Sout)
- When the output speed is 100 rpm, it acts on the center of the output shaft.
- For continous operation, the service life is no lessthan 10,000 hours.
- The noise value was measured based on the input rotational speed of 3000 rpm, i=10.

Any product models and parameters in this sample are subject to change without prior notice. Please confirm with the company before ordering.

TCBR060 Series

TCBR060 One Stage

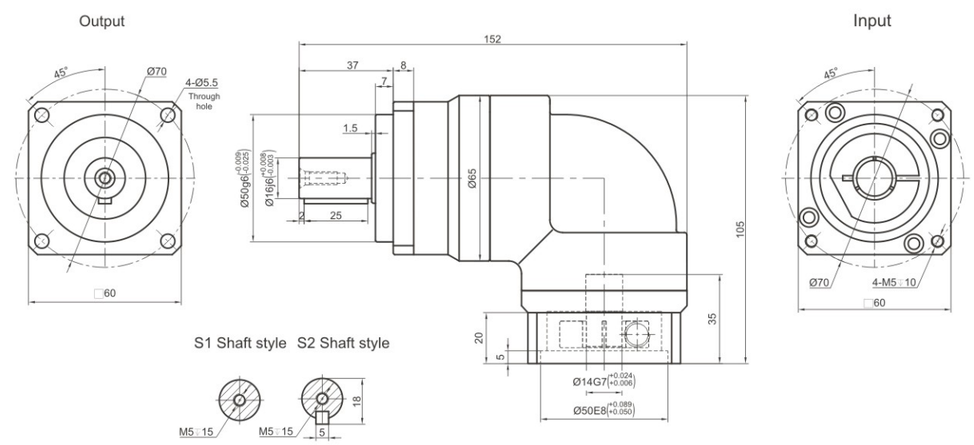

TCBR060 Two Stage

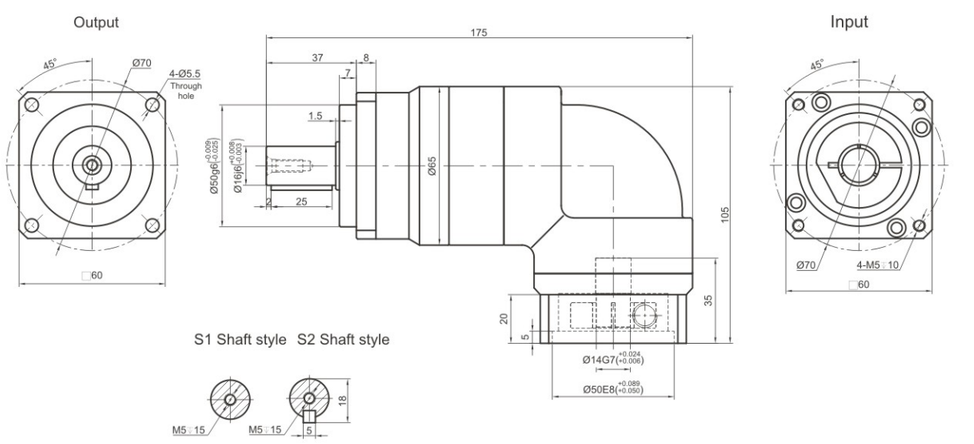

Performance Data

TCBR series planetary reducer has modular design compact structure with high reliability and efficiency.
It is a perfect optimization of both performance and cost.

TCBR060			One Stage												Two Stage											
Speed Ratio	i		3	4	5	6	7	8	10	12	14	16	20	25	30	35	40	50	60	70	80	100	120	140	160	200
Norminal Output Torque	T_1	Nm	35	45	55	50	46	43	40	50	40	43	40	55	50	46	43	55	50	46	43	40	50	46	43	40
Emergency Stop Torque	T_2	Nm	T1×3											T1×3												
Norminal Input Speed	S_1	rpm	3000											3000												
Maximum Input Speed	S_2	rpm	6000											6000												
Maximum Output Torque	T_4	Nm	T1×3×60%											T1×3×60%												
Maximum Radial Force	F_a	N	1450											1450												
Maximum Axial Force	F_b	N	724											724												
Torsional Rigidity	–	Nm/arcmin	6											6												
Effciency	η	%	⩾95											⩾92												
Service Life	–	h	20000											20000												
Noise	–	dB	⩽66											⩽66												
Weight	–	Kg	1.5											2.1												
Backlash	P0	arcmin	-											-												
	P1		⩽6											⩽9												
	P2		⩽8											⩽12												
Operating Temperature	–	℃	-20~90											-20~90												
Lubrication	–		Synthetic Grease											Synthetic grease												
Protection Class	–		IP65											IP65												
Mounting Position	–		Any Direction											Any Direction												
Moment of Inertia	J	kg.cm²	0.35							0.07				0.09												

Notes:

- Speed ratio (i=Sin/Sout)
- When the output speed is 100 rpm, it acts on the center of the output shaft.
- For continous operation, the service life is no lessthan 10,000 hours.
- The noise value was measured based on the input rotational speed of 3000 rpm, i=10.

Any product models and parameters in this sample are subject to change without prior notice. Please confirm with the company before ordering.

TCBR090 Series

TCBR090 One Stage

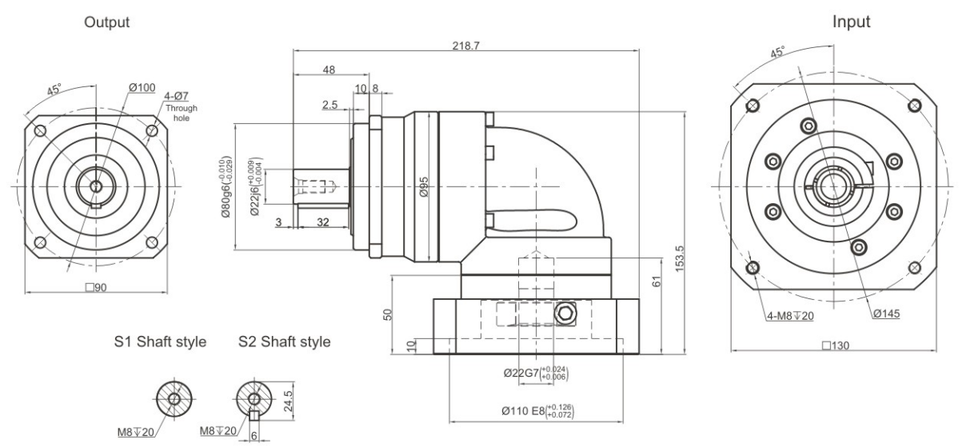

TCBR090 Two Stage

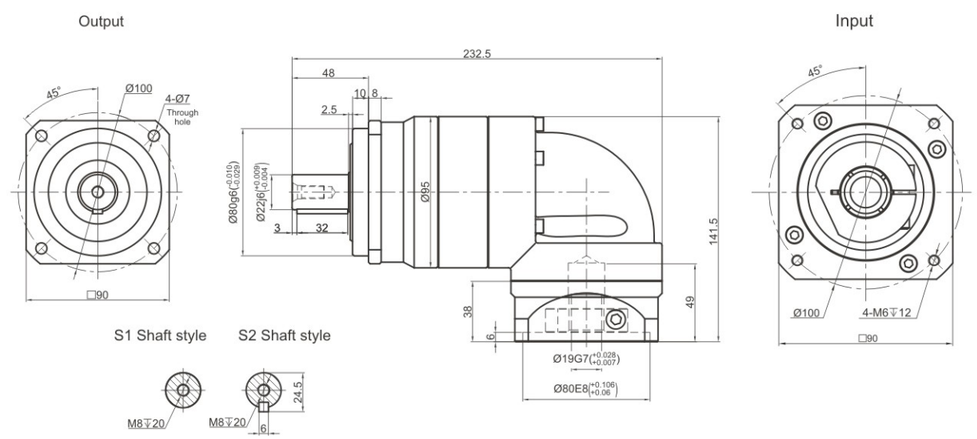

Performance Data

TCBR series planetary reducer has modular design compact structure with high reliability and efficiency.
It is a perfect optimization of both performance and cost.

TCBR090			One Stage											Two Stage											
Speed Ratio	i		3	4	5	6	7	8	10	12	14	16	20	25	30	35	40	50	60	70	80	100	120	140	160	200
Norminal Output Torque	T_1	Nm	85	115	140	140	135	115	97	140	135	115	97	140	140	135	115	140	140	135	115	97	140	135	115	97
Emergency Stop Torque	T_2	Nm	T1×3											T1×3												
Norminal Input Speed	S_1	rpm	3000											3000												
Maximum Input Speed	S_2	rpm	6000											6000												
Maximum Output Torque	T_4	Nm	T1×3×60%											T1×3×60%												
Maximum Radial Force	F_a	N	3200											3200												
Maximum Axial Force	F_b	N	1600											1600												
Torsional Rigidity	–	Nm/arcmin	14											14												
Effciency	η	%	⩾95											⩾92												
Service Life	–	h	20000											20000												
Noise	–	dB	⩽67											⩽67												
Weight	–	Kg	6.4											7.7												
Backlash	P0	arcmin	⩽4											⩽7												
	P1		⩽6											⩽9												
	P2		⩽8											⩽12												
Operating Temperature	–	℃	-20~90											-20~90												
Lubrication	–		Synthetic Grease											Synthetic grease												
Protection Class	–		IP65											IP65												
Mounting Position	–		Any Direction											Any Direction												
Moment of Inertia	J	$kg.cm^2$	2.25							1.87				0.35									0.31			

Notes:

- Speed ratio (i=Sin/Sout)
- When the output speed is 100 rpm, it acts on the center of the output shaft.
- For continous operation, the service life is no lessthan 10,000 hours.
- The noise value was measured based on the input rotational speed of 3000 rpm, i=10.

Any product models and parameters in this sample are subject to change without prior notice. Please confirm with the company before ordering.

TCBR120 Series

TCBR120 One Stage

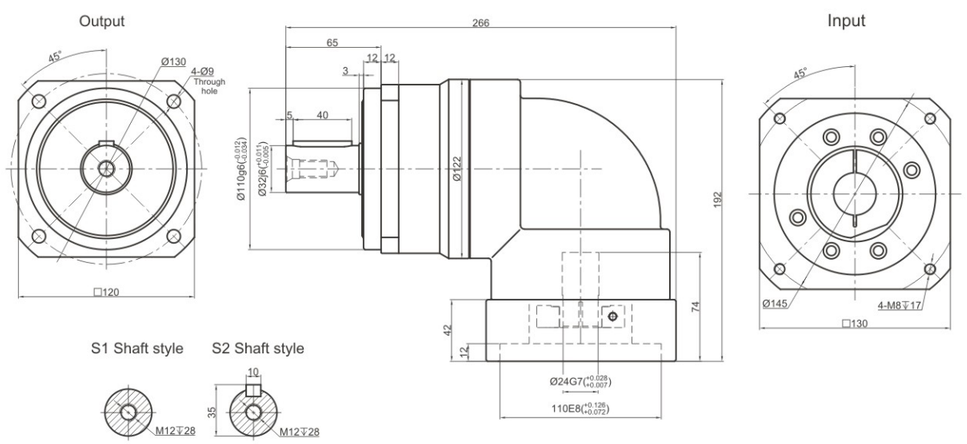

TCBR120 Two Stage

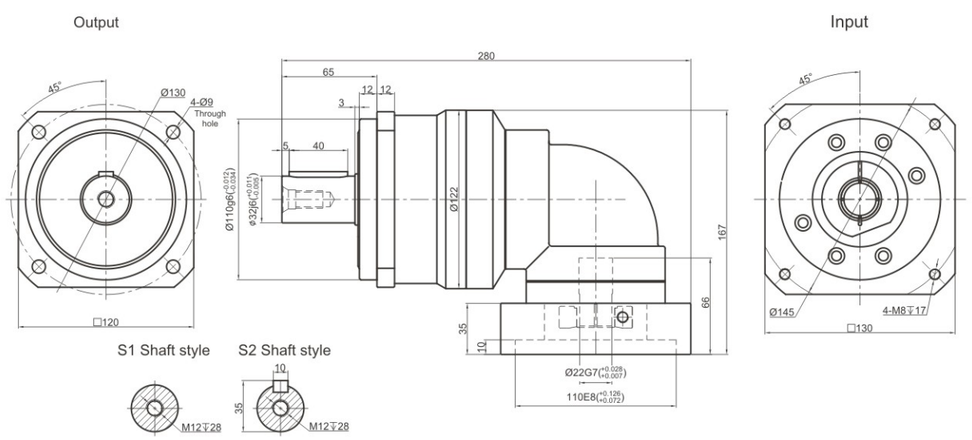

Performance Data

TCBR series planetary reducer has modular design compact structure with high reliability and efficiency.
It is a perfect optimization of both performance and cost.

TCBR120			One Stage												Two Stage												
Speed Ratio	i		3	4	5	6	7	8	10	12	14	16	20	25	30	35	40	50	60	70	80	100	120	140	160	200
Norminal Output Torque	T_1	Nm	190	245	315	305	290	255	225	305	290	255	225	315	305	290	255	315	305	290	255	225	305	290	255	225
Emergency Stop Torque	T_2	Nm	T1×3											T1×3												
Norminal Input Speed	S_1	rpm	3000											3000												
Maximum Input Speed	S_2	rpm	5000											5000												
Maximum Output Torque	T_4	Nm	T1×3×60%											T1×3×60%												
Maximum Radial Force	F_a	N	6600											6600												
Maximum Axial Force	F_b	N	3200											3200												
Torsional Rigidity	–	Nm/arcmin	25											25												
Effciency	η	%	⩾95											⩾92												
Service Life	–	h	20000											20000												
Noise	–	dB	⩽70											⩽70												
Weight	–	Kg	13											14												
Backlash	P0	arcmin	⩽4											⩽7												
	P1		⩽6											⩽9												
	P2		⩽8											⩽12												
Operating Temperature	–	℃	-20~90											-20~90												
Lubrication	–		Synthetic Grease											Synthetic grease												
Protection Class	–		IP65											IP65												
Mounting Position	–		Any Direction											Any Direction												
Moment of Inertia	J	kg.cm²	6.84							6.25				2.25									1.87			

Notes:

- Speed ratio (i=Sin/Sout)
- When the output speed is 100 rpm, it acts on the center of the output shaft.
- For continous operation, the service life is no lessthan 10,000 hours.
- The noise value was measured based on the input rotational speed of 3000 rpm, i=10.

Any product models and parameters in this sample are subject to change without prior notice. Please confirm with the company before ordering.

TCE070 Series

TCE070 One Stage

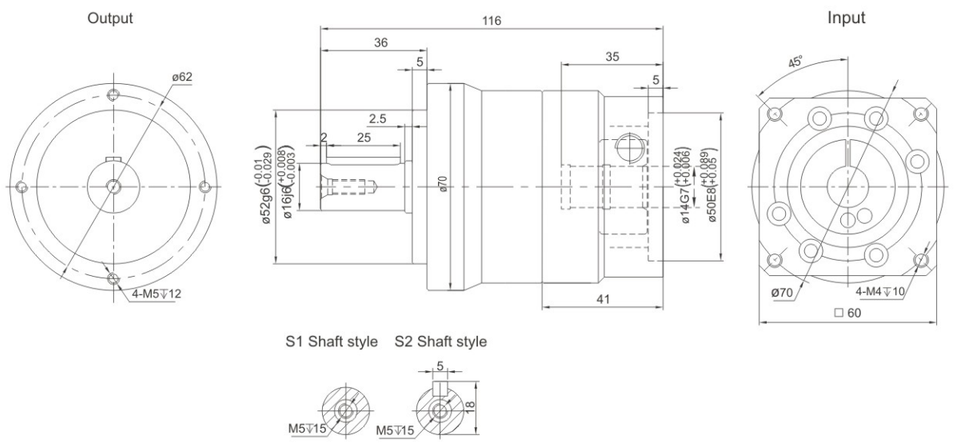

TCE070 Two Stage

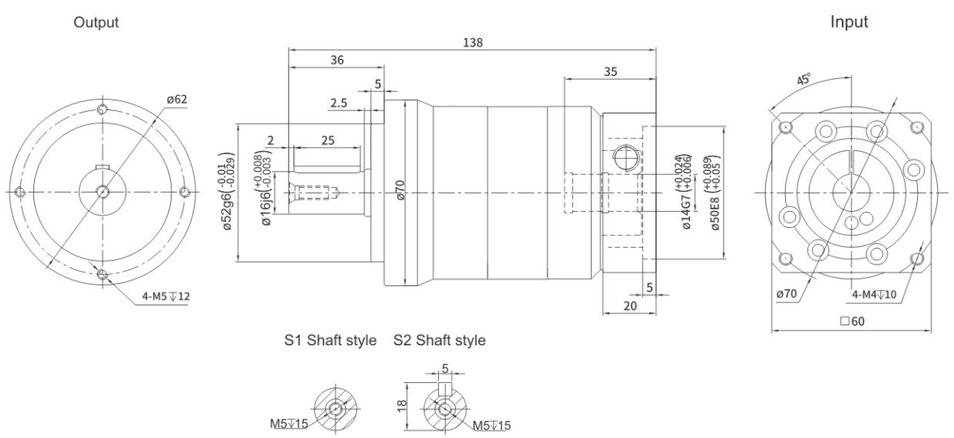

Performance Data

TCE series planetary reducer has modular design compact structure with high reliability and efficiency.
It is a perfect optimization of both performance and cost.

TCE070			One Stage									Two Stage									
Speed Ratio	i		3	4	5	6	7	8	9	10	15	20	25	30	35	40	50	60	70	80	100
Norminal Output Torque	T_1	Nm	40	45	55	50	45	45	-	35	40	45	55	50	45	45	55	50	45	45	35
Emergency Stop Torque	T_2	Nm	$T_1 \times 3$								$T_1 \times 3$										
Norminal Input Speed	S_1	rpm	3000								3000										
Maximum Input Speed	S_2	rpm	6000								6000										
Maximum Output Torque	T_4	Nm	$T_1 \times 3 \times 60\%$								$T_1 \times 3 \times 60\%$										
Maximum Radial Force	F_a	N	1530								1530										
Maximum Axial Force	F_b	N	765								765										
Torsional Rigidity	–	Nm/arcmin	7								7										
Effciency	η	%	⩾97								⩾94										
Service Life	–	h	20000								20000										
Noise	–	dB	⩽58								⩽58										
Weight	–	Kg	1.3								1.9										
Backlash	P0	arcmin	–								–										
	P1		⩽3								⩽5										
	P2		⩽5								⩽7										
Operating Temperature	–	℃	-20~90								-20~90										
Lubrication	–		Synthetic Grease								Synthetic grease										
Protection Class	–		IP65								IP65										
Mounting Position	–		Any Direction								Any Direction										
Moment of Inertia	J	$kg.cm^2$	0.16	0.14	0.13						0.13										

Notes:

- Speed ratio (i=Sin/Sout)
- When the output speed is 100 rpm, it acts on the center of the output shaft.
- For continous operation, the service life is no lessthan 10,000 hours.
- The noise value was measured based on the input rotational speed of 3000 rpm, i=10.

Any product models and parameters in this sample are subject to change without prior notice. Please confirm with the company before ordering.

TCE090 Series

TCE090 One Stage

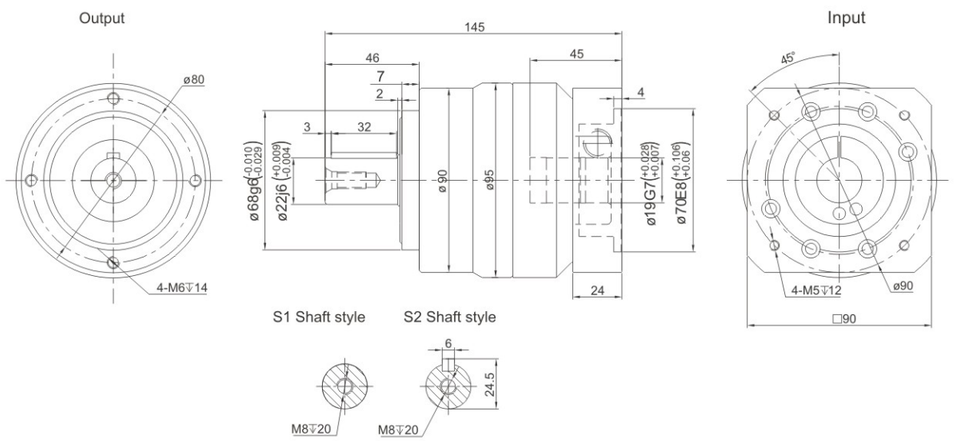

TCE090 Two Stage

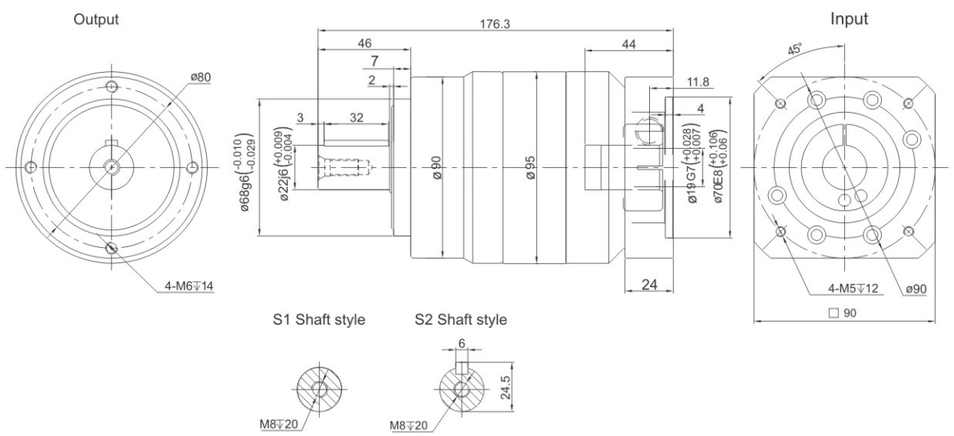

Performance Data

TCE series planetary reducer has modular design compact structure with high reliability and efficiency.
It is a perfect optimization of both performance and cost.

TCE090			One Stage								Two Stage										
Speed Ratio	i		3	4	5	6	7	8	9	10	15	20	25	30	35	40	50	60	70	80	100
Norminal Output Torque	T_1	Nm	100	110	150	140	135	120	-	100	100	110	150	140	135	120	150	140	135	120	100
Emergency Stop Torque	T_2	Nm	$T_1 \times 3$								$T_1 \times 3$										
Norminal Input Speed	S_1	rpm	3000								3000										
Maximum Input Speed	S_2	rpm	6000								6000										
Maximum Output Torque	T_4	Nm	$T_1 \times 3 \times 60\%$								$T_1 \times 3 \times 60\%$										
Maximum Radial Force	F_a	N	3250								3250										
Maximum Axial Force	F_b	N	1625								1625										
Torsional Rigidity	–	Nm/arcmin	14								14										
Efficiency	η	%	⩾97								⩾94										
Service Life	–	h	20000								20000										
Noise	–	dB	⩽60								⩽60										
Weight	–	Kg	3.6								5.1										
Backlash	P0	arcmin	–								–										
	P1		⩽3								⩽5										
	P2		⩽5								⩽7										
Operating Temperature	–	℃	-20~90								-20~90										
Lubrication	–		Synthetic Grease								Synthetic grease										
Protection Class	–		IP65								IP65										
Mounting Position	–		Any Direction								Any Direction										
Moment of Inertia	J	$kg.cm^2$	0.61	0.48	0.47	0.45	0.45	0.44	-	0.44	0.47									0.44	

Notes:

- Speed ratio (i=Sin/Sout)
- When the output speed is 100 rpm, it acts on the center of the output shaft.
- For continous operation, the service life is no lessthan 10,000 hours.
- The noise value was measured based on the input rotational speed of 3000 rpm, i=10.

Any product models and parameters in this sample are subject to change without prior notice. Please confirm with the company before ordering.

TCE120 Series

TCE120 One Stage

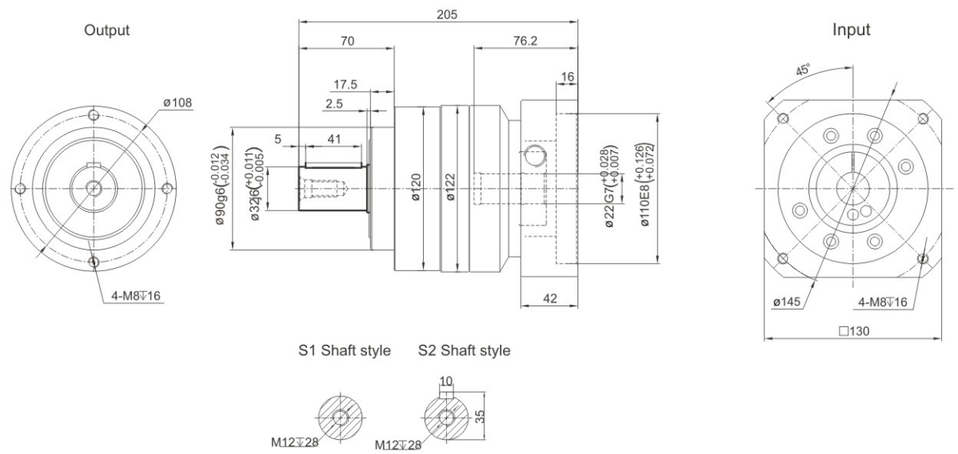

TCE120 Two Stage

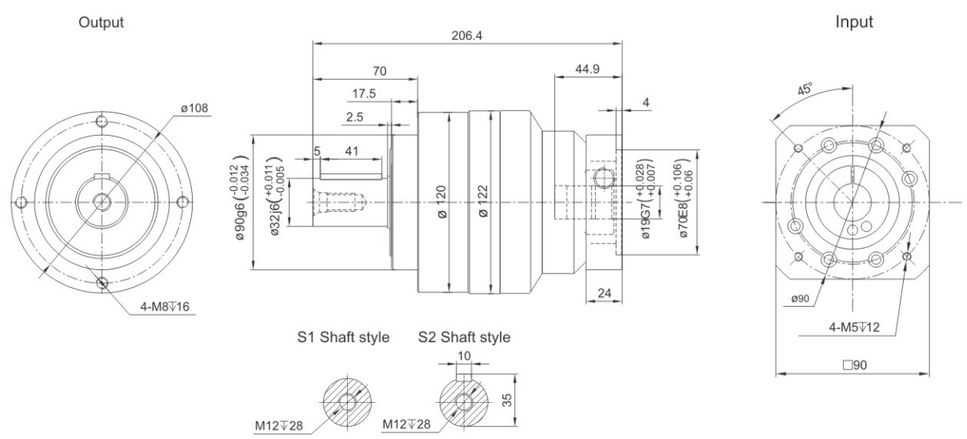

Performance Data

TCE series planetary reducer has modular design compact structure with high reliability and efficiency.
It is a perfect optimization of both performance and cost.

TCE120			One Stage								Two Stage										
Speed Ratio	i		3	4	5	6	7	8	9	10	15	20	25	30	35	40	50	60	70	80	100
Norminal Output Torque	T_1	Nm	200	280	320	310	300	255	-	220	200	280	320	310	300	255	320	310	300	255	220
Emergency Stop Torque	T_2	Nm	$T_1 \times 3$								$T_1 \times 3$										
Norminal Input Speed	S_1	rpm	3000								3000										
Maximum Input Speed	S_2	rpm	6000								6000										
Maximum Output Torque	T_4	Nm	$T_1 \times 3 \times 60\%$								$T_1 \times 3 \times 60\%$										
Maximum Radial Force	F_a	N	6700								6700										
Maximum Axial Force	F_b	N	3350								3350										
Torsional Rigidity	–	Nm/arcmin	25								25										
Efficiency	η	%	≥97								≥94										
Service Life	–	h	20000								20000										
Noise	–	dB	≤63								≤63										
Weight	–	Kg	7.7								9										
Backlash	P0	arcmin	–								–										
	P1		≤3								≤5										
	P2		≤5								≤7										
Operating Temperature	–	℃	-20~90								-20~90										
Lubrication	–		Synthetic Grease								Synthetic grease										
Protection Class	–		IP65								IP65										
Mounting Position	–		Any Direction								Any Direction										
Moment of Inertia	J	$kg.cm^2$	3.25	2.74	2.71	2.65	2.62	2.58	-	2.57	0.47						0.44				

Notes:

- Speed ratio (i=Sin/Sout)
- When the output speed is 100 rpm, it acts on the center of the output shaft.
- For continous operation, the service life is no lessthan 10,000 hours.
- The noise value was measured based on the input rotational speed of 3000 rpm, i=10.

Any product models and parameters in this sample are subject to change without prior notice. Please confirm with the company before ordering.

TCE155 Series

TCE155 One Stage

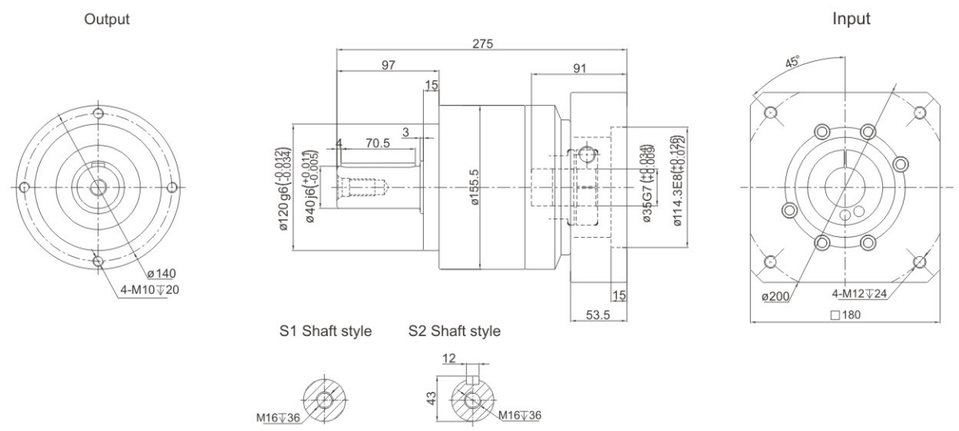

TCE155 Two Stage

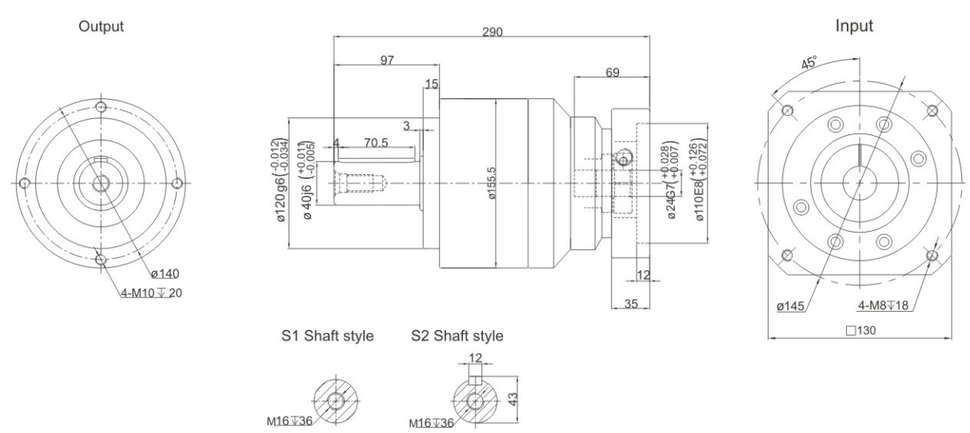

Performance Data

TCE series planetary reducer has modular design compact structure with high reliability and efficiency.
It is a perfect optimization of both performance and cost.

TCE155			One Stage								Two Stage										
Speed Ratio	i		3	4	5	6	7	8	9	10	15	20	25	30	35	40	50	60	70	80	100
Norminal Output Torque	T_1	Nm	340	535	650	600	550	500	-	445	340	535	650	600	550	500	650	600	550	500	445
Emergency Stop Torque	T_2	Nm	$T_1 \times 3$								$T_1 \times 3$										
Norminal Input Speed	S_1	rpm	2000								2000										
Maximum Input Speed	S_2	rpm	4000								4000										
Maximum Output Torque	T_4	Nm	$T_1 \times 3 \times 60\%$								$T_1 \times 3 \times 60\%$										
Maximum Radial Force	F_a	N	9400								9400										
Maximum Axial Force	F_b	N	4700								4700										
Torsional Rigidity	–	Nm/arcmin	50								50										
Efficiency	η	%	⩾97								⩾94										
Service Life	–	h	20000								20000										
Noise	–	dB	⩽65								⩽65										
Weight	–	Kg	14.5								17.5										
Backlash	P0	arcmin	–								–										
	P1		⩽3								⩽5										
	P2		⩽5								⩽7										
Operating Temperature	–	℃	-20~90								-20~90										
Lubrication	–		Synthetic Grease								Synthetic grease										
Protection Class	–		IP65								IP65										
Mounting Position	–		Any Direction								Any Direction										
Moment of Inertia	J	$kg.cm^2$	9.21	7.54	7.42	7.25	7.14	7.07	-	7.03	2.71						2.57				

Notes:

- Speed ratio (i=Sin/Sout)
- When the output speed is 100 rpm, it acts on the center of the output shaft.
- For continous operation, the service life is no lessthan 10,000 hours.
- The noise value was measured based on the input rotational speed of 3000 rpm, i=10.

Any product models and parameters in this sample are subject to change without prior notice. Please confirm with the company before ordering.

Hollow Rotating Platform

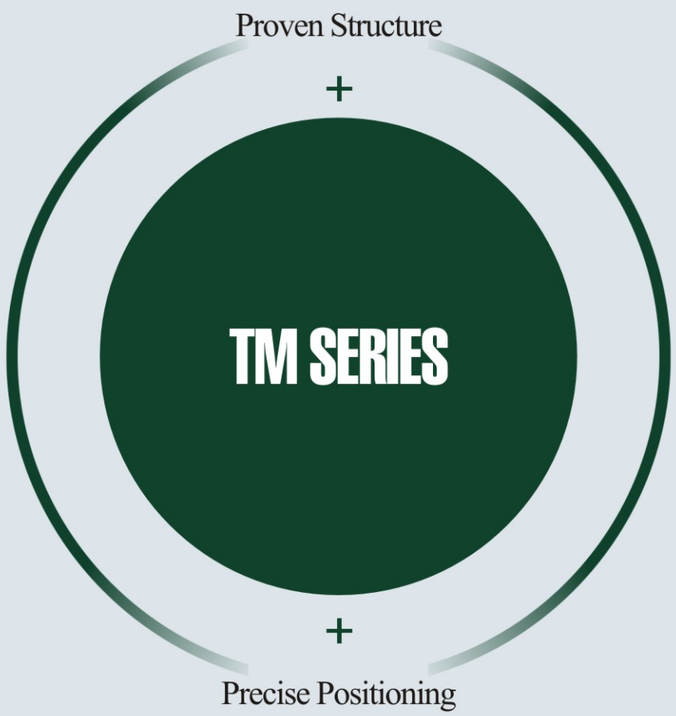

The hollow rotating platform can be driven by different brand servo motors with high precision.The operation is stable and the positioning is precision.

GEARKO

DRIVES THE PRECISION

TMN - Hollow Rotary Actuators

TMN Series

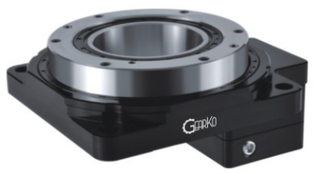

TMN	–	60	–	K	–	05	–	N
Rotate platform series		specification				Reduction ratio		Optional
		60 85 130 200		K: Planetary reducer T: Right angle reducer		05 10 18		N: servo motor B: Stepper motor S: closed loop stepper motor

TMN060

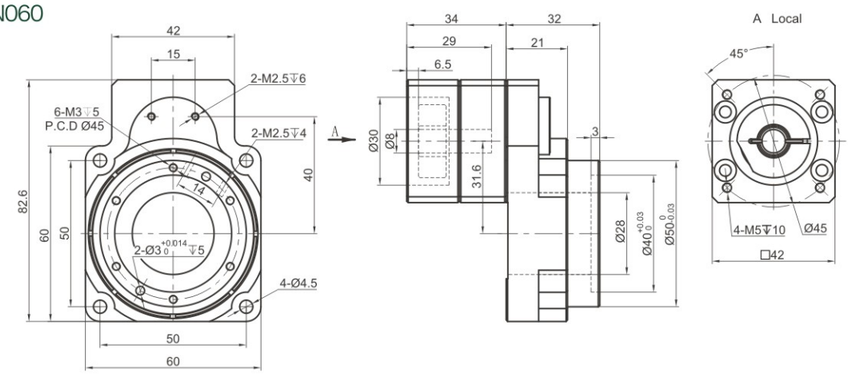

TMN085

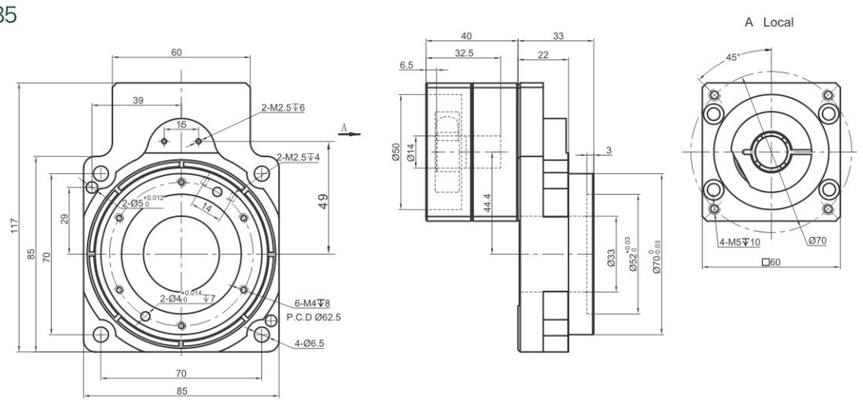

TMN130

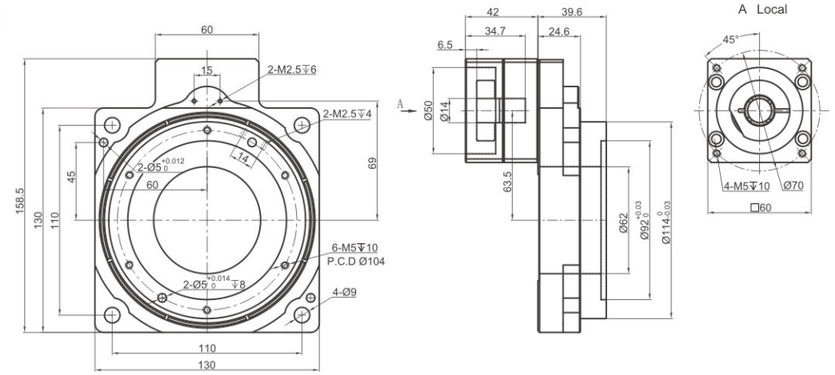

TMN200

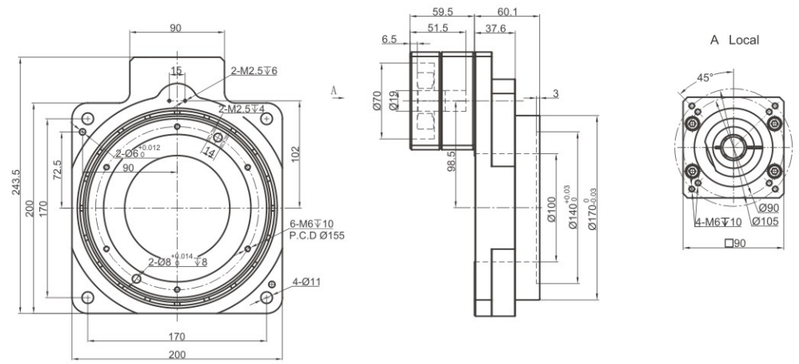

		TMN60		TMN85		TMN130		TMN200	
Speed Ratio		5	10	5	10	10	18	10	18
Matching servo motor	W	50～100		200～400		200～400		750	
Bearing Type		Crossed roller bearing		Crossed roller bearing		Crossed roller bearing		Crossed roller bearing	
Allowable torque	N.m	5.3		20	16	32	20	65	50
Allowable disk output speed	rpm	200		300	250	250	150	250	
Allowable axial load	N	250		500		2000		4000	
Repeat positioning accuracy	arcsec	±10		±10		±10		±10	
Communication accuracy	arcmin	3		3		3		3	
Flatness of rotating platform	mm	0.01		0.01		0.01		0.01	
Outside diameter runout of output end	mm	0.01		0.01		0.01		0.01	
Precision	h	20000		20000		20000		20000	
Noise	dB	≤65		≤65		≤65		≤65	
Backlash	arcmin	≤1		≤1		≤1		≤1	
Protection Class		IP40		IP40		IP40		IP40	
Weight	kg	1.2		1.8		2.5		8	

The above technical parameters are for reference only. Actually, according to the data provided by the customer, relevant technical parameters and dimensions will be issued.
Origin Sensor Kit: TMN Series with OMRON EE-SX674