Precision Planetary Reducer

Precise & Efficient

+

TB/TBR SERIES

+

Versatile Applications

TB/TBR Series planetary reducer achieves maximum efficiency even at the highest speed and load.
Robust structure and low backlash enable it to be applied in almost any shaft-output applications.

GEARKO

DRIVES THE PRECISION

TB042 Series

TB042 One Stage

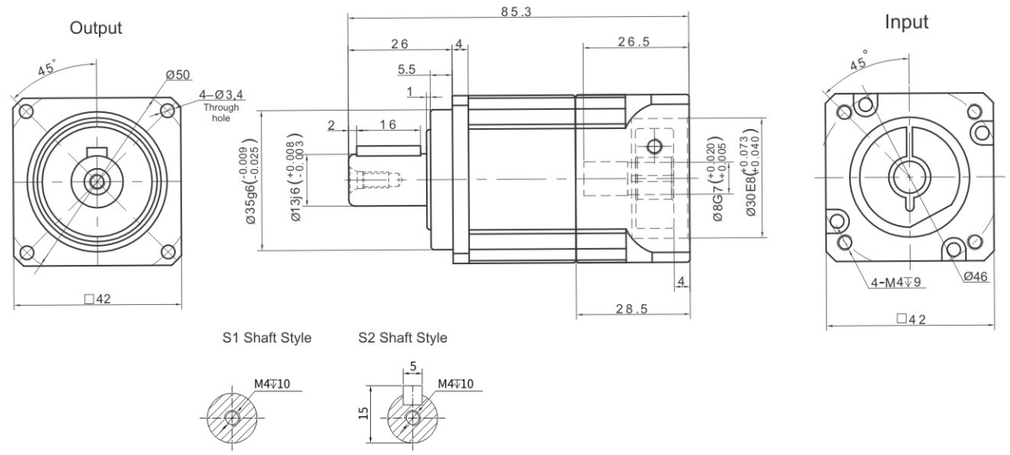

TB042 Two Stage

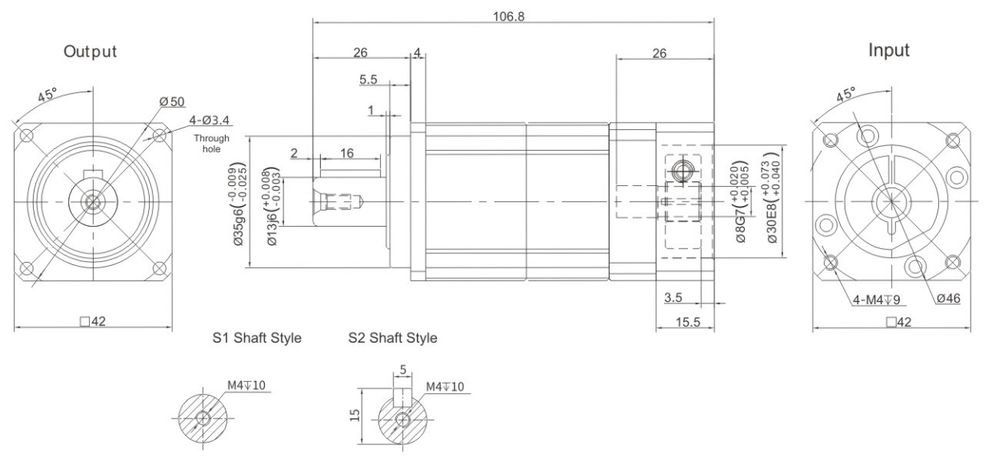

Performance Data

The TB series reducer adopts a standardized flange interface. The installation is convenient and quick. Due to its integral structure design, this high-precision model can operate excellently in many demanding working application.

TB042			One Stage								Two Stage									
Speed Ratio	i		–	4	5	6	7	8	9	10	–	20	25	30	35	40	50	60	70	80	100
Norminal Output Torque	T_1	Nm	–	19	22	20	19	17	-	14	–	19	22	20	19	17	22	20	19	17	14
Emergency Stop Torque	T_2	Nm	$T_1 \times 3$								$T_1 \times 3$										
Norminal Input Speed	S_1	rpm	5000								5000										
Maximum Input Speed	S_2	rpm	10000								10000										
Maximum Output Torque	T_4	Nm	$T_1 \times 3 \times 60\%$								$T_1 \times 3 \times 60\%$										
Maximum Radial Force	F_a	N	780								780										
Maximum Axial Force	F_b	N	390								390										
Torsional Rigidity	-	Nm/arcmin	3								3										
Effciency	η	%	⩾97								⩾94										
Service Life	–	h	20000								20000										
Noise	–	dB	⩽55								⩽55										
Weight	–	Kg	0.6								0.8										
Backlash	P0	arcmin	⩽1								⩽3										
	P1		⩽3								⩽5										
	P2		⩽5								⩽7										
Operating Temperature	–	℃	-20~90								-20~90										
Lubrication	–		Synthetic Grease								Synthetic Grease										
Protection Class	–		IP65								IP65										
Mounting Position	–		Any Direaction								Any Direaction										
Moment of Inertia	J	kg.cm²	0.03								0.03										

Notes:

- Speed ratio (i=Sin/Sout)
- When the output speed is 100 rpm, it acts on the center of the output shaft.
- For continous operation, the service life is no lessthan 10,000 hours.
- The noise value was measured based on the input rotational speed of 3000 rpm, i=10.

Any product models and parameters in this sample are subject to change without prior notice. Please confirm with the company before ordering.

TB060 Series

TB060 One Stage

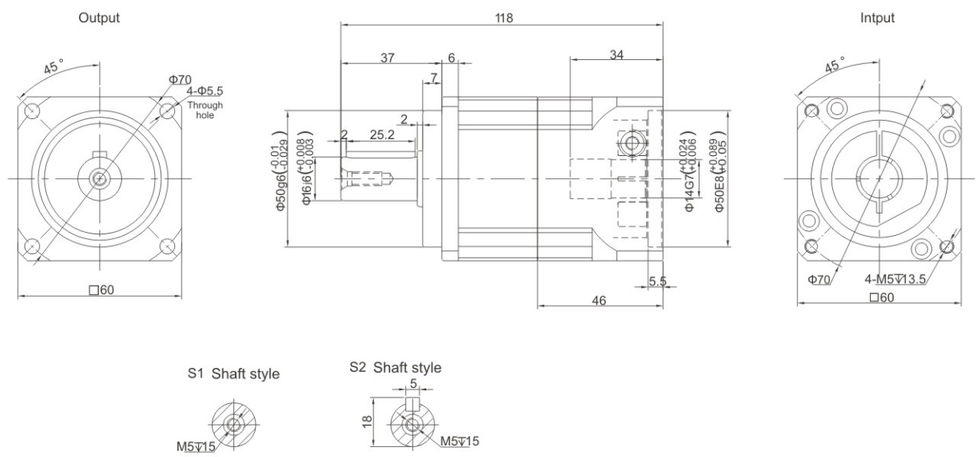

TB060 Two Stage

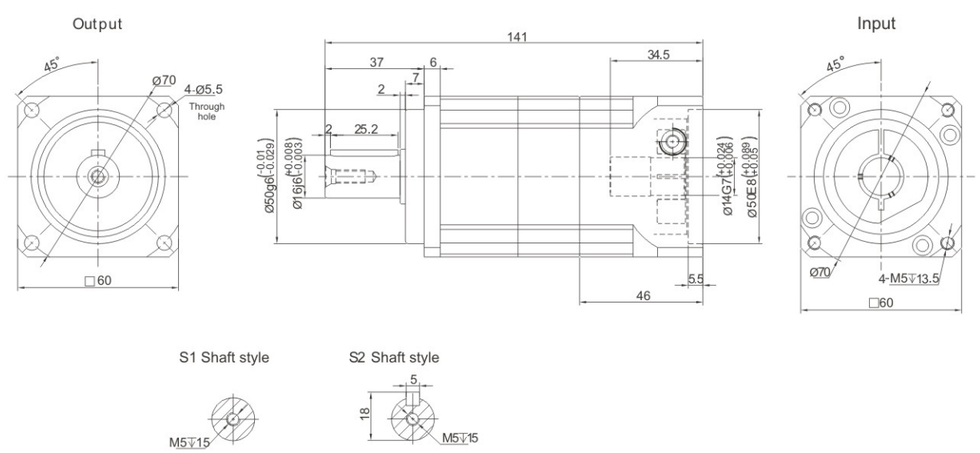

Performance Data

The TB series reducer adopts a standardized flange interface. The installation is convenient and quick. Due to its integral structure design, this high-precision model can operate excellently in many demanding working application.

TB060			One Stage																		
Speed Ratio		i	3	4	5	6	7	8	9	10	15	20	25	30	35	40	50	60	70	80	100
Norminal Output Torque	T_1	Nm	55	50	60	55	50	45	-	40	55	50	60	55	50	45	60	55	50	45	40
Emergency Stop Torque	T_2	Nm	$T_1 \times 3$																		
Norminal Input Speed	S_1	rpm	5000																		
Maximum Input Speed	S_2	rpm	10000																		
Maximum Output Torque	T_4	Nm	$T_1 \times 3 \times 60\%$																		
Maximum Radial Force	F_a	N	1530																		
Maximum Axial Force	F_b	N	765																		
Torsional Rigidity	-	Nm/arcmin	7																		
Effciency	η	%	⩾97																		
Service Life	–	h	20000																		
Noise	–	dB	⩽58																		
Weight	–	Kg	1.3																		
Backlash	P0	arcmin	⩽1																		
	P1		⩽3																		
	P2		⩽5																		
Operating Temperature	–	℃	-20~90																		
Lubrication	–		Synthetic Grease																		
Protection Class	–		IP65																		
Mounting Position	–		Any Direaction																		
Moment of Inertia	J	kg.cm²	0.16	0.14	0.13																

Notes:

- Speed ratio (i=Sin/Sout)
- When the output speed is 100 rpm, it acts on the center of the output shaft.
- For continous operation, the service life is no lessthan 10,000 hours.
- The noise value was measured based on the input rotational speed of 3000 rpm, i=10.

Any product models and parameters in this sample are subject to change without prior notice. Please confirm with the company before ordering.

TB090 Series

TB090 One Stage

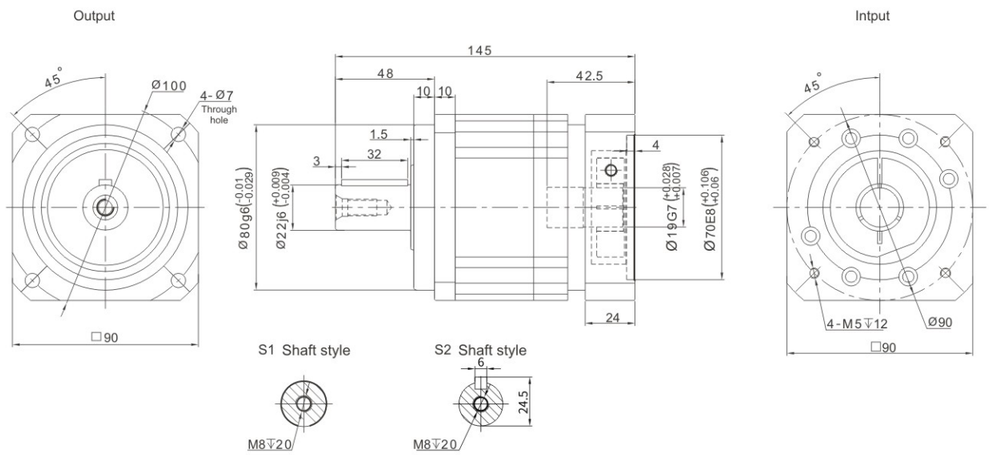

TB090 Two Stage

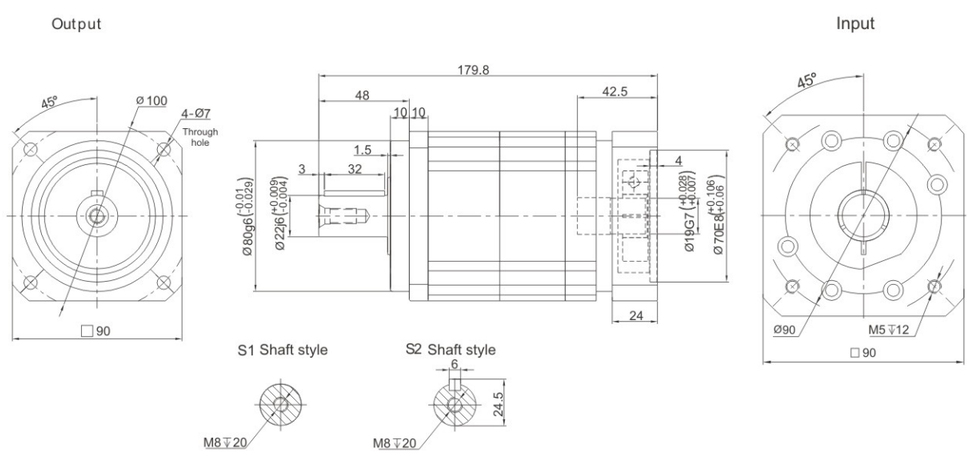

Performance Data

The TB series reducer adopts a standardized flange interface. The installation is convenient and quick. Due to its integral structure design, this high-precision model can operate excellently in many demanding working application.

TB090			One Stage																		
Speed Ratio		i	3	4	5	6	7	8	9	10	15	20	25	30	35	40	50	60	70	80	100
Norminal Output Torque	T_1	Nm	130	140	160	150	140	120	-	100	130	140	160	150	140	120	160	150	140	120	100
Emergency Stop Torque	T_2	Nm	$T_1 \times 3$																		
Norminal Input Speed	S_1	rpm	4000																		
Maximum Input Speed	S_2	rpm	8000																		
Maximum Output Torque	T_4	Nm	$T_1 \times 3 \times 60\%$																		
Maximum Radial Force	F_a	N	3250																		
Maximum Axial Force	F_b	N	1625																		
Torsional Rigidity	-	Nm/arcmin	14																		
Effciency	η	%	⩾97																		
Service Life	–	h	20000																		
Noise	–	dB	⩽60																		
Weight	–	Kg	3.6																		
Backlash	P0	arcmin	⩽1																		
	P1		⩽3																		
	P2		⩽5																		
Operating Temperature	–	℃	-20~90																		
Lubrication	–		Synthetic Grease																		
Protection Class	–		IP65																		
Mounting Position	–		Any Direaction																		
Moment of Inertia	J	kg.cm²	0.61	0.48	0.47	0.45		0.44			0.47							0.44			

Notes:

- Speed ratio (i=Sin/Sout)
- When the output speed is 100 rpm, it acts on the center of the output shaft.
- For continous operation, the service life is no lessthan 10,000 hours.
- The noise value was measured based on the input rotational speed of 3000 rpm, i=10.

Any product models and parameters in this sample are subject to change without prior notice. Please confirm with the company before ordering.

TB115 Series

TB115 One Stage

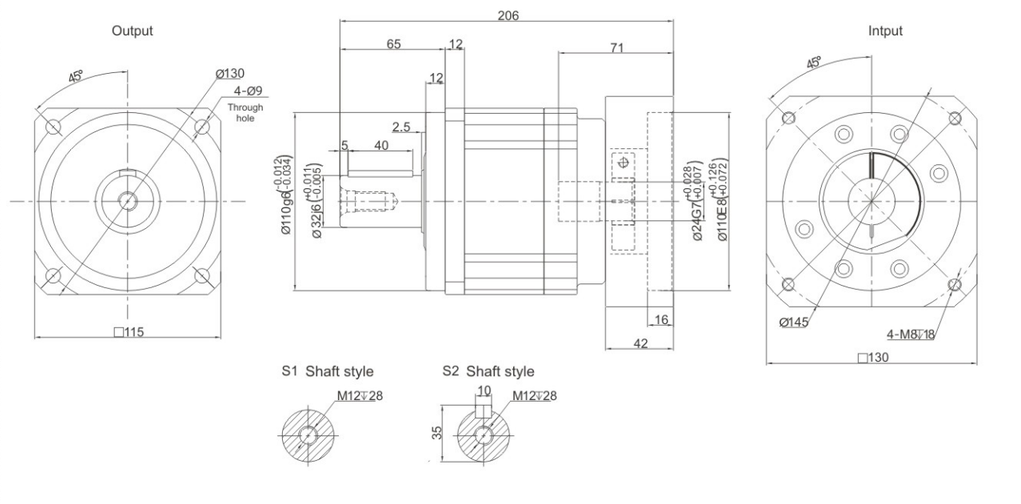

TB115 Two Stage

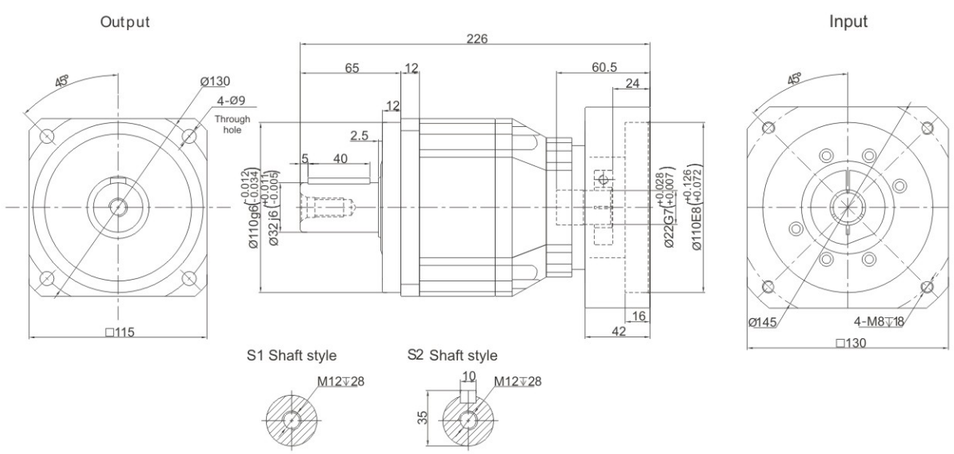

Performance Data

The TB series reducer adopts a standardized flange interface. The installation is convenient and quick. Due to its integral structure design, this high-precision model can operate excellently in many demanding working application.

TB115			One Stage									Two Stage									
Speed Ratio		i	3	4	5	6	7	8	9	10	15	20	25	30	35	40	50	60	70	80	100
Norminal Output Torque	T_1	Nm	208	290	330	310	300	260	-	230	208	290	330	310	300	260	330	310	300	260	230
Emergency Stop Torque	T_2	Nm	$T_1 \times 3$									$T_1 \times 3$									
Norminal Input Speed	S_1	rpm	4000									4000									
Maximum Input Speed	S_2	rpm	8000									8000									
Maximum Output Torque	T_4	Nm	$T_1 \times 3 \times 60\%$									$T_1 \times 3 \times 60\%$									
Maximum Radial Force	F_a	N	6700									6700									
Maximum Axial Force	F_b	N	3350									3350									
Torsional Rigidity	-	Nm/arcmin	25									25									
Effciency	η	%	⩾97									⩾94									
Service Life	–	h	20000									20000									
Noise	–	dB	⩽63									⩽63									
Weight	–	Kg	7.7									9									
Backlash	P0	arcmin	⩽1									⩽3									
	P1		⩽3									⩽5									
	P2		⩽5									⩽7									
Operating Temperature	–	℃	-20~90									-20~90									
Lubrication	–		Synthetic Grease									Synthetic Grease									
Protection Class	–		IP65									IP65									
Mounting Position	–		Any Direaction									Any Direaction									
Moment of Inertia	J	kg.cm²	3.25	2.74	2.71	2.65	2.62	2.58	–	2.57		0.47						0.44			

Notes:

- Speed ratio (i=Sin/Sout)
- When the output speed is 100 rpm, it acts on the center of the output shaft.
- For continous operation, the service life is no lessthan 10,000 hours.
- The noise value was measured based on the input rotational speed of 3000 rpm, i=10.

Any product models and parameters in this sample are subject to change without prior notice. Please confirm with the company before ordering.

TB142 Series

TB142 One Stage

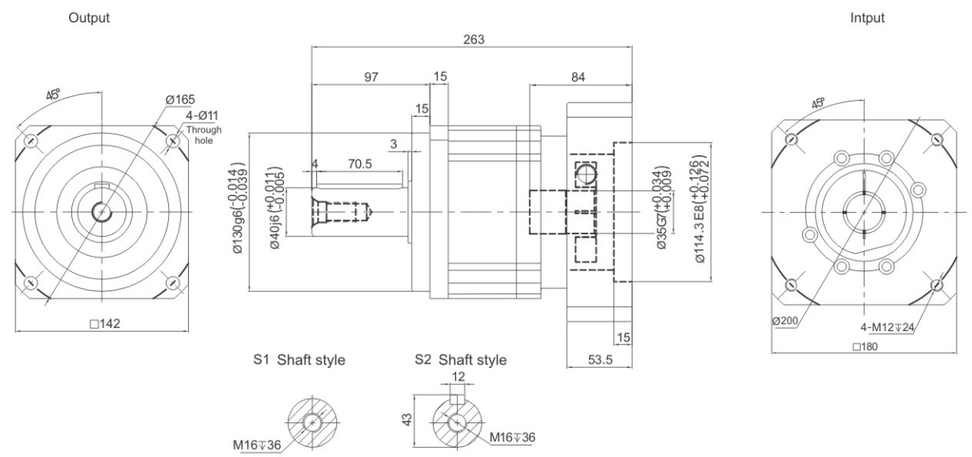

TB142 Two Stage

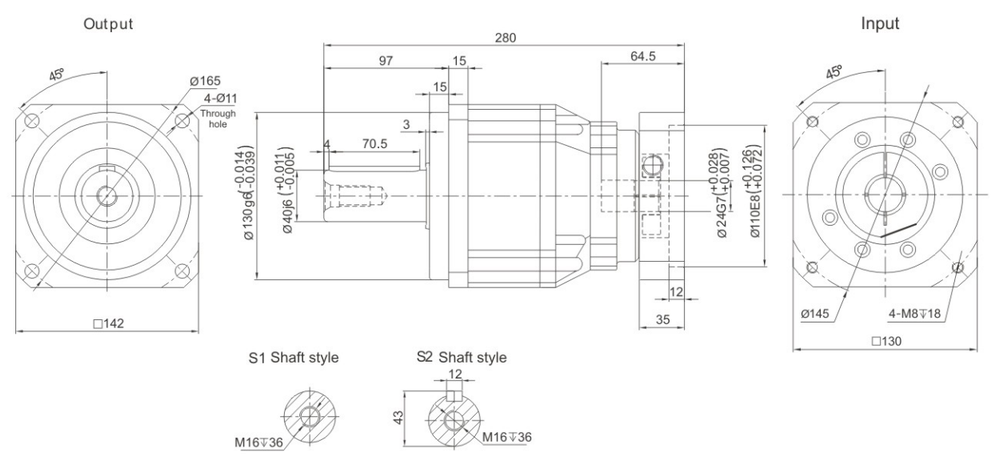

Performance Data

The TB series reducer adopts a standardized flange interface. The installation is convenient and quick. Due to its integral structure design, this high-precision model can operate excellently in many demanding working application.

TB142			One Stage								Two Stage										
Speed Ratio		i	3	4	5	6	7	8	9	10	15	20	25	30	35	40	50	60	70	80	100
Norminal Output Torque	T_1	Nm	342	542	650	600	550	500	-	450	342	542	650	600	550	500	650	600	550	500	450
Emergency Stop Torque	T_2	Nm	$T_1 \times 3$								$T_1 \times 3$										
Norminal Input Speed	S_1	rpm	3000								3000										
Maximum Input Speed	S_2	rpm	6000								6000										
Maximum Output Torque	T_4	Nm	$T_1 \times 3 \times 60\%$								$T_1 \times 3 \times 60\%$										
Maximum Radial Force	F_a	N	9400								9400										
Maximum Axial Force	F_b	N	4700								4700										
Torsional Rigidity	-	Nm/arcmin	50								50										
Effciency	η	%	≥97								≥94										
Service Life	–	h	20000								20000										
Noise	–	dB	≤65								≤65										
Weight	–	Kg	14.5								17.5										
Backlash	P0	arcmin	≤1								≤3										
	P1		≤3								≤5										
	P2		≤5								≤10										
Operating Temperature	–	℃	-20~90								-20~90										
Lubrication	–		Synthetic Grease								Synthetic Grease										
Protection Class	–		IP65								IP65										
Mounting Position	–		Any Direaction								Any Direaction										
Moment of Inertia	J	kg.cm²	9.21	7.54	7.42	7.25	7.14	7.07	–	7.03	2.71						2.57				

Notes:

- Speed ratio (i=Sin/Sout)
- When the output speed is 100 rpm, it acts on the center of the output shaft.
- For continous operation, the service life is no lessthan 10,000 hours.
- The noise value was measured based on the input rotational speed of 3000 rpm, i=10.

Any product models and parameters in this sample are subject to change without prior notice. Please confirm with the company before ordering.

TB180 Series

TB180 One Stage

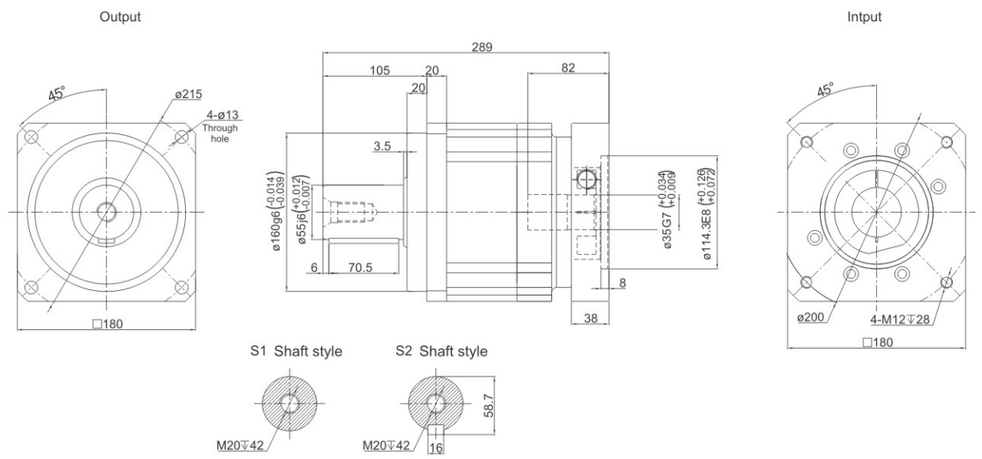

TB180 Two Stage

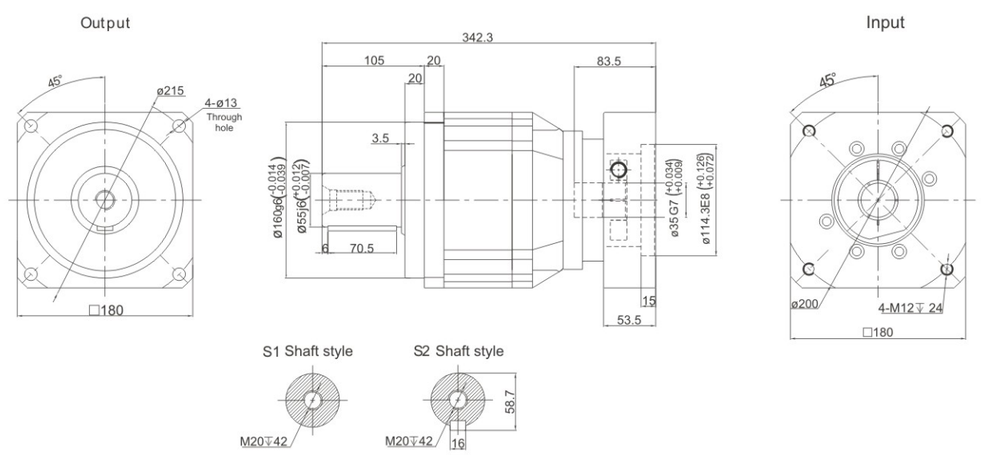

Performance Data

The TB series reducer adopts a standardized flange interface. The installation is convenient and quick. Due to its integral structure design, this high-precision model can operate excellently in many demanding working application.

TB180			One Stage								Two Stage										
Speed Ratio		i	3	4	5	6	7	8	9	10	15	20	25	30	35	40	50	60	70	80	100
Norminal Output Torque	T_1	Nm	588	1050	1200	1100	1100	1000	-	900	588	1050	1200	1100	1100	1000	1200	1100	1100	1000	900
Emergency Stop Torque	T_2	Nm	$T_1 \times 3$								$T_1 \times 3$										
Norminal Input Speed	S_1	rpm	3000								3000										
Maximum Input Speed	S_2	rpm	6000								6000										
Maximum Output Torque	T_4	Nm	$T_1 \times 3 \times 60\%$								$T_1 \times 3 \times 60\%$										
Maximum Radial Force	F_a	N	14500								14500										
Maximum Axial Force	F_b	N	7250								7250										
Torsional Rigidity	-	Nm/arcmin	145								145										
Effciency	η	%	≥97								≥94										
Service Life	–	h	20000								20000										
Noise	–	dB	≤66								≤66										
Weight	–	Kg	29								33										
Backlash	P0	arcmin	≤1								≤3										
	P1		≤3								≤5										
	P2		≤5								≤7										
Operating Temperature	–	℃	-20~90								-20~90										
Lubrication	–		Synthetic Grease								Synthetic Grease										
Protection Class	–		IP65								IP65										
Mounting Position	–		Any Direaction								Any Direaction										
Moment of Inertia	J	kg.cm²	28.98	23.67	23.29	22.75	22.48	22.59	–	22.51	7.42						7.03				

Notes:

- Speed ratio (i=Sin/Sout)
- When the output speed is 100 rpm, it acts on the center of the output shaft.
- For continous operation, the service life is no lessthan 10,000 hours.
- The noise value was measured based on the input rotational speed of 3000 rpm, i=10.

Any product models and parameters in this sample are subject to change without prior notice. Please confirm with the company before ordering.

TB220 Series

TB220 One Stage

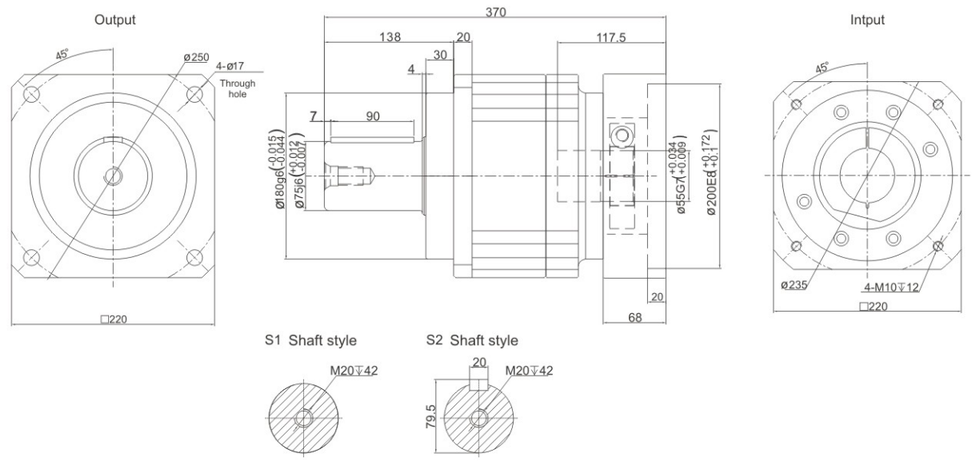

TB220 Two Stage

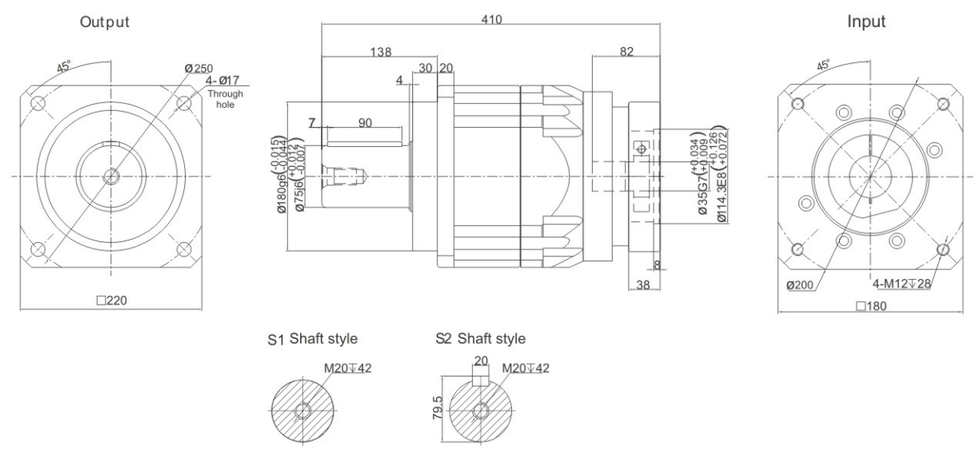

Performance Data

The TB series reducer adopts a standardized flange interface. The installation is convenient and quick. Due to its integral structure design, this high-precision model can operate excellently in many demanding working application.

TB220			One Stage																		
Speed Ratio		i	3	4	5	6	7	8	9	10	15	20	25	30	35	40	50	60	70	80	100
Norminal Output Torque	T_1	Nm	1140	1700	2000	1900	1800	1600	-	1500	1140	1700	2000	1900	1800	1600	2000	1900	1800	1600	1500
Emergency Stop Torque	T_2	Nm	$T_1 \times 3$																		
Norminal Input Speed	S_1	rpm	2000																		
Maximum Input Speed	S_2	rpm	4000																		
Maximum Output Torque	T_4	Nm	$T_1 \times 3 \times 60\%$																		
Maximum Radial Force	F_a	N	50000																		
Maximum Axial Force	F_b	N	25000																		
Torsional Rigidity	–	Nm/arcmin	225																		
Efficiency	η	%	≥97																		
Service Life	–	h	20000																		
Noise	–	dB	≤70																		
Weight	–	Kg	48																		
Backlash	P0	arcmin	≤1																		
	P1		≤3																		
	P2		≤5																		
Operating Temperature	–	℃	-20~90																		
Lubrication	–		Synthetic Grease																		
Protection Class	–		IP65																		
Mounting Position	–		Any Direaction																		
Moment of Inertia	J	kg.cm²	69.61	54.37	53.27	51.72	50.97	50.84	–	50.56	23.29									22.51	

Notes:

- Speed ratio (i=Sin/Sout)
- When the output speed is 100 rpm, it acts on the center of the output shaft.
- For continous operation, the service life is no lessthan 10,000 hours.
- The noise value was measured based on the input rotational speed of 3000 rpm, i=10.

Any product models and parameters in this sample are subject to change without prior notice. Please confirm with the company before ordering.

TBR042 Series

TBR042 One Stage

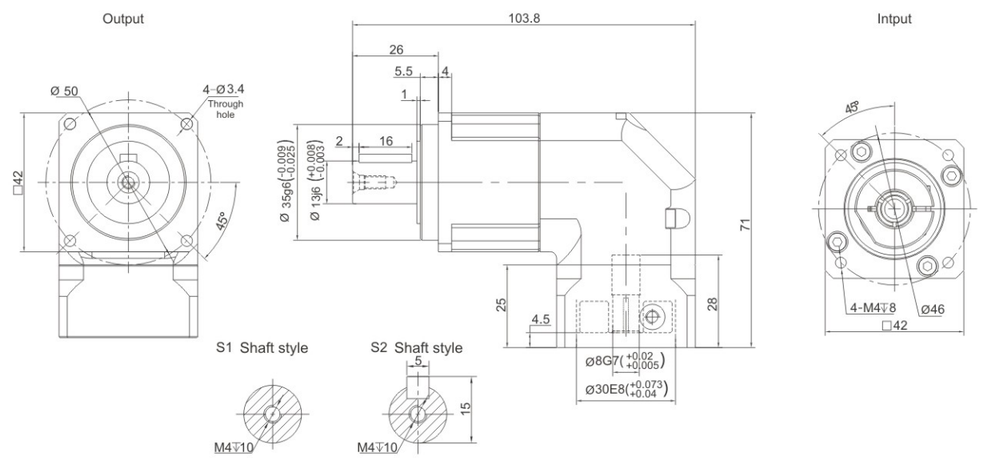

TBR042 Two Stage

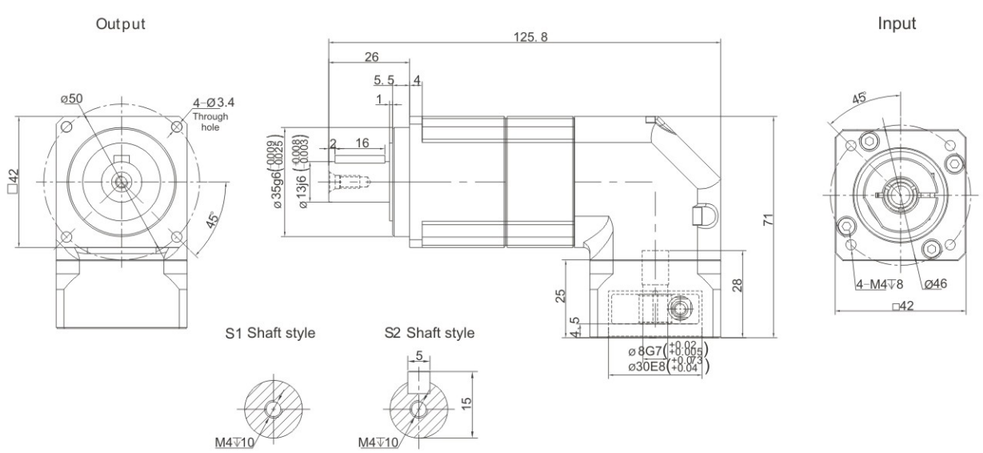

Performance Data

The TBR series reducer adopts a standardized flange interface. The installation is convenient and quick. Due to its integral structure design, this high-precision model can operate excellently in many demanding working application.

TBR042			One Stage																																		
Speed Ratio	i		–	4	5	6	7	8	9	10	12	14	16	20	25	30	35	40	50	60	70	80	100	120	140	160	180	200									
Norminal Output Torque	T_1	Nm	–	12	15	18	19	17	–	14	18	–	17	14	15	20	19	17	14	20	19	17	14	–	–	–	–	–									
Emergency Stop Torque	T_2	Nm	$T_1 \times 3$																	$T_1 \times 3$																	
Norminal Input Speed	S_1	rpm	5000																	5000																	
Maximum Input Speed	S_2	rpm	10000																	10000																	
Maximum Output Torque	T_4	Nm	$T_1 \times 3 \times 60\%$																	$T_1 \times 3 \times 60\%$																	
Maximum Radial Force	F_a	N	780																	780																	
Maximum Axial Force	F_b	N	390																	390																	
Torsional Rigidity	–	Nm/arcmin	3																	3																	
Effciency	η	%	⩾95																	⩾92																	
Service Life	–	h	20000																	20000																	
Noise	–	dB	⩽61																	⩽61																	
Weight	–	Kg	0.9																	1.1																	
Backlash	P0	arcmin	–																	–																	
	P1		⩽4																	⩽7																	
	P2		⩽6																	⩽9																	
Operating Temperature	–	℃	-20~90																	-20~90																	
Lubrication	–		Synthetic Grease																	Synthetic Grease																	
Protection Class	–		IP65																	IP65																	
Mounting Position	–		Any Direaction																	Any Direaction																	
Moment of Inertia	J	$kg.cm^2$	0.09																	0.09																	

Notes:

- Speed ratio (i=Sin/Sout)
- When the output speed is 100 rpm, it acts on the center of the output shaft.
- For continous operation, the service life is no lessthan 10,000 hours.
- The noise value was measured based on the input rotational speed of 3000 rpm, i=10.

Any product models and parameters in this sample are subject to change without prior notice. Please confirm with the company before ordering.

TBR Series - High Speed and Precision

TBR060 Series

TBR060 One Stage

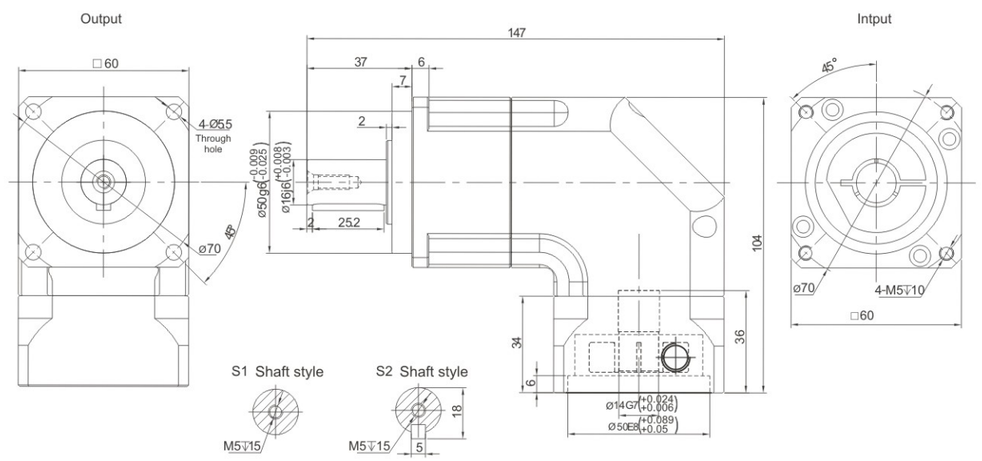

TBR060 Two Stage

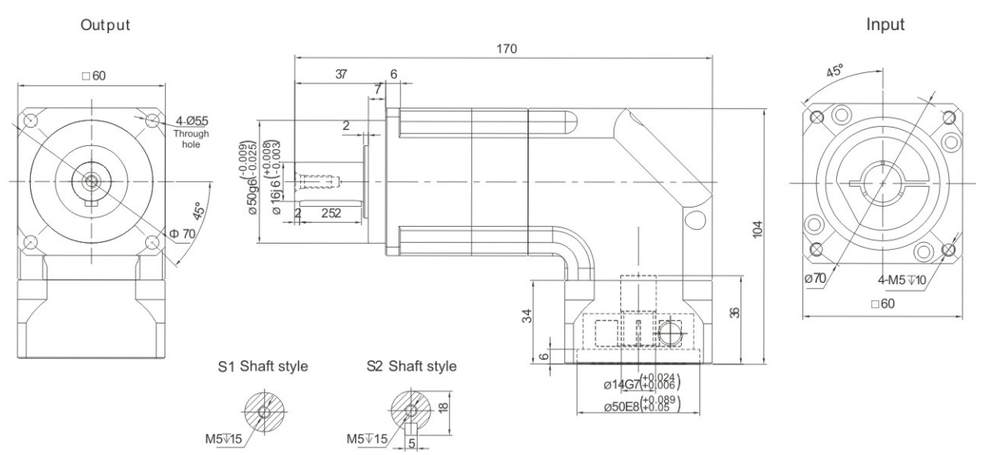

Performance Data

The TBR series reducer adopts a standardized flange interface. The installation is convenient and quick. Due to its integral structure design, this high-precision model can operate excellently in many demanding working application.

TBR060			One Stage												Two Stage													
Speed Ratio	i		3	4	5	6	7	8	9	10	12	14	16	20	25	30	35	40	50	60	70	80	100	120	140	160	180	200
Norminal Output Torque	T_1	Nm	36	48	60	55	50	45	-	40	55	42	45	40	60	55	50	45	60	55	50	45	40	55	50	45	-	40
Emergency Stop Torque	T_2	Nm	$T_1 \times 3$												$T_1 \times 3$													
Norminal Input Speed	S_1	rpm	5000												5000													
Maximum Input Speed	S_2	rpm	10000												10000													
Maximum Output Torque	T_4	Nm	$T_1 \times 3 \times 60\%$												$T_1 \times 3 \times 60\%$													
Maximum Radial Force	F_a	N	1530												1530													
Maximum Axial Force	F_b	N	765												765													
Torsional Rigidity	–	Nm/arcmin	7												7													
Effciency	η	%	⩾95												⩾92													
Service Life	–	h	20000												20000													
Noise	–	dB	⩽63												⩽63													
Weight	–	Kg	1.5												2.1													
Backlash	P0	arcmin	-												-													
	P1		⩽4												⩽7													
	P2		⩽6												⩽9													
Operating Temperature	–	℃	-20~90												-20~90													
Lubrication	–		Synthetic Grease												Synthetic Grease													
Protection Class	–		IP65												IP65													
Mounting Position	–		Any Direaction												Any Direaction													
Moment of Inertia	J	kg.cm²	0.35							0.07					0.09													

Notes:

- Speed ratio (i=Sin/Sout)
- When the output speed is 100 rpm, it acts on the center of the output shaft.
- For continous operation, the service life is no lessthan 10,000 hours.
- The noise value was measured based on the input rotational speed of 3000 rpm, i=10.

Any product models and parameters in this sample are subject to change without prior notice. Please confirm with the company before ordering.

TBR Series - High Speed and Precision

TBR090 Series

TBR090 One Stage

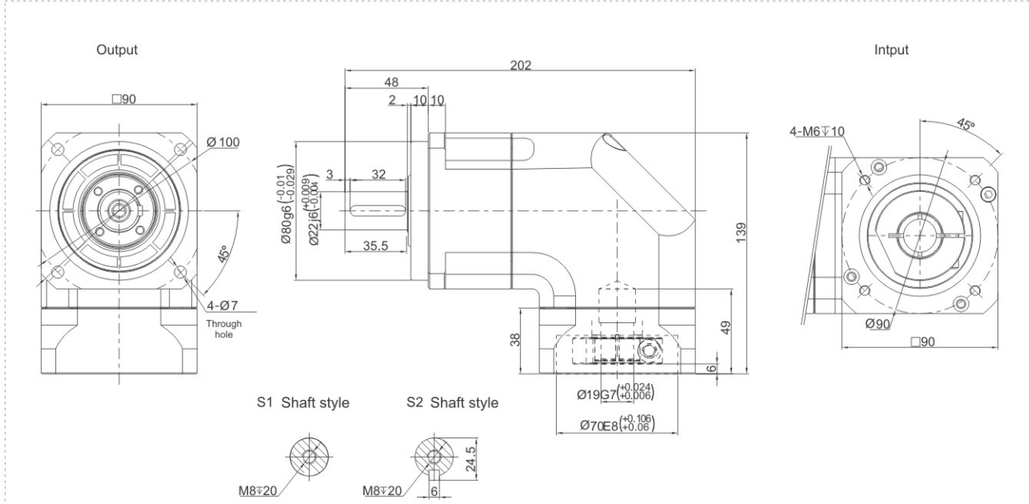

TBR090 Two Stage

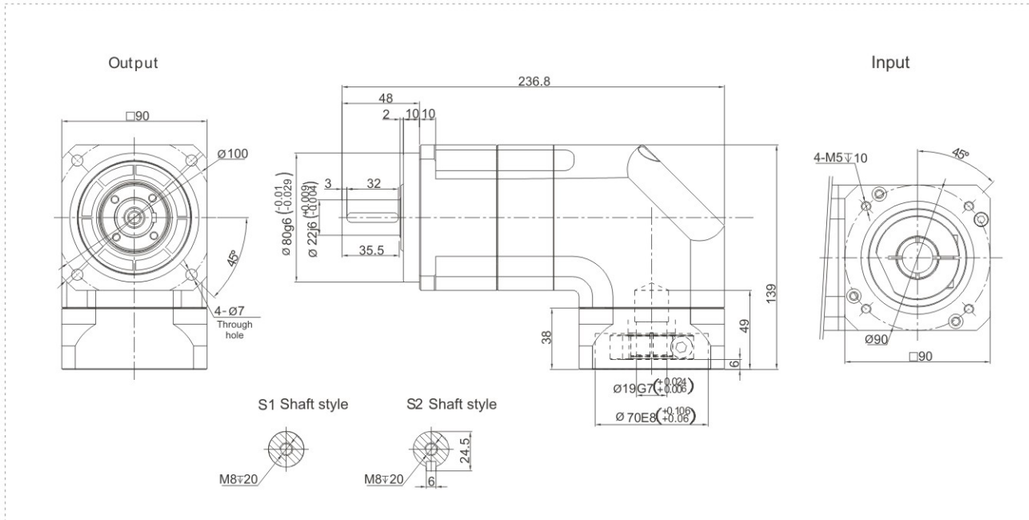

Performance Data

The TBR series reducer adopts a standardized flange interface. The installation is convenient and quick. Due to its integral structure design, this high-precision model can operate excellently in many demanding working application.

TBR090			One Stage												Two Stage													
Speed Ratio	i		3	4	5	6	7	8	9	10	12	14	16	20	25	30	35	40	50	60	70	80	100	120	140	160	180	200
Norminal Output Torque	T_1	Nm	90	120	150	150	140	120	-	100	150	140	120	100	150	150	140	120	100	150	140	120	100	150	140	120	-	100
Emergency Stop Torque	T_2	Nm	$T_1 \times 3$												$T_1 \times 3$													
Norminal Input Speed	S_1	rpm	4000												4000													
Maximum Input Speed	S_2	rpm	8000												8000													
Maximum Output Torque	T_4	Nm	$T_1 \times 3 \times 60\%$												$T_1 \times 3 \times 60\%$													
Maximum Radial Force	F_a	N	3250												3250													
Maximum Axial Force	F_b	N	1625												1625													
Torsional Rigidity	–	Nm/arcmin	14												14													
Effciency	η	%	⩾95												⩾92													
Service Life	–	h	20000												20000													
Noise	–	dB	⩽65												⩽65													
Weight	–	Kg	6.4												7.7													
Backlash	P0	arcmin	⩽2												⩽4													
	P1		⩽4												⩽7													
	P2		⩽6												⩽9													
Operating Temperature	–	℃	-20~90												-20~90													
Lubrication	–		Synthetic Grease												Synthetic Grease													
Protection Class	–		IP65												IP65													
Mounting Position	–		Any Direaction												Any Direaction													
Moment of Inertia	J	kg.cm²	2.25							1.87					0.35													0.31

Notes:

- Speed ratio (i=Sin/Sout)
- When the output speed is 100 rpm, it acts on the center of the output shaft.
- For continous operation, the service life is no lessthan 10,000 hours.
- The noise value was measured based on the input rotational speed of 3000 rpm, i=10.

Any product models and parameters in this sample are subject to change without prior notice. Please confirm with the company before ordering.

TBR Series - High Speed and Precision

TBR115 Series

TBR115 One Stage

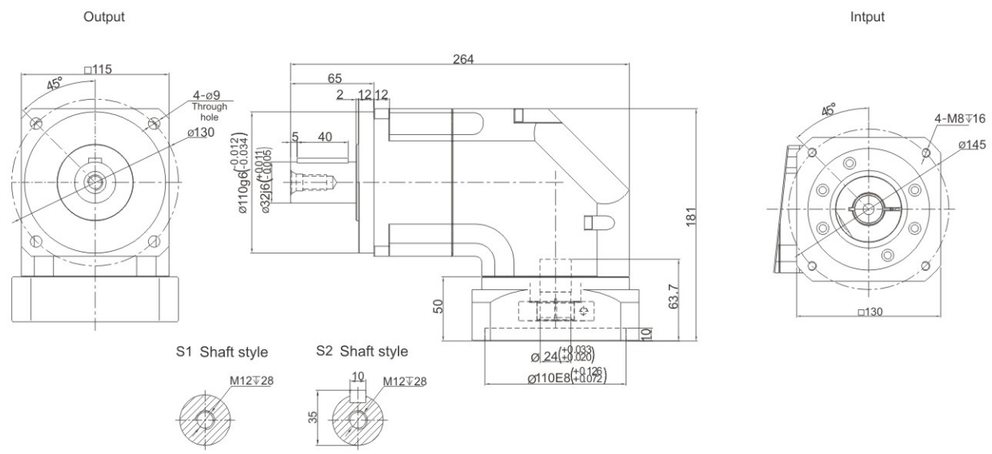

TBR115 Two Stage

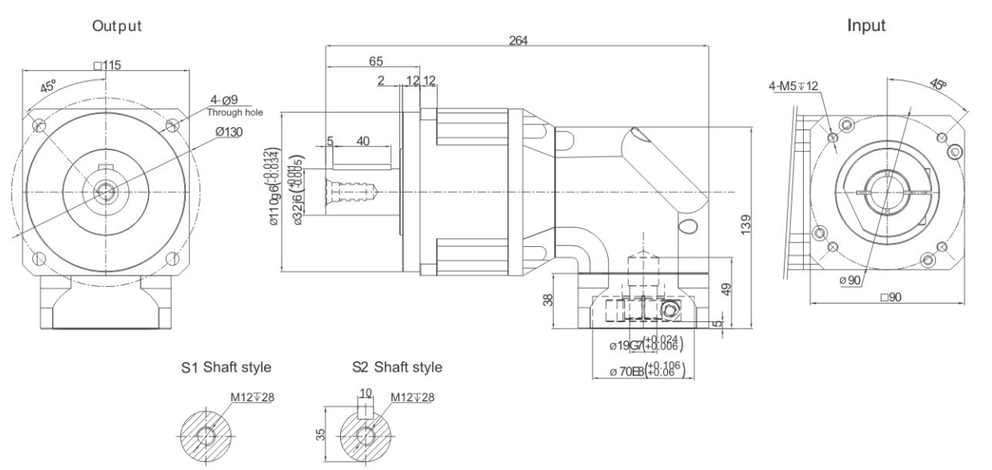

Performance Data

The TBR series reducer adopts a standardized flange interface. The installation is convenient and quick. Due to its integral structure design, this high-precision model can operate excellently in many demanding working application.

TBR115			One Stage																													
Speed Ratio	i		3	4	5	6	7	8	9	10	12	14	16	20	25	30	35	40	50	60	70	80	100	120	140	160	180	200				
Norminal Output Torque	T_1	Nm	195	260	325	310	300	260	-	230	310	300	260	230	325	310	300	260	230	310	300	260	230	310	300	260	-	230				
Emergency Stop Torque	T_2	Nm	$T_1 \times 3$																													
Norminal Input Speed	S_1	rpm	4000																													
Maximum Input Speed	S_2	rpm	8000																													
Maximum Output Torque	T_4	Nm	$T_1 \times 3 \times 60\%$																													
Maximum Radial Force	F_a	N	6700																													
Maximum Axial Force	F_b	N	3350																													
Torsional Rigidity	–	Nm/arcmin	25																													
Effciency	η	%	⩾95																													
Service Life	–	h	20000																													
Noise	–	dB	⩽68																													
Weight	–	Kg	13																													
Backlash	P0	arcmin	⩽2																													
	P1		⩽4																													
	P2		⩽6																													
Operating Temperature	–	℃	-20~90																													
Lubrication	–		Synthetic Grease																													
Protection Class	–		IP65																													
Mounting Position	–		Any Direaction																													
Moment of Inertia	J	kg.cm²	6.84							6.25					2.25								1.87									

Notes:

- Speed ratio (i=Sin/Sout)
- When the output speed is 100 rpm, it acts on the center of the output shaft.
- For continous operation, the service life is no lessthan 10,000 hours.
- The noise value was measured based on the input rotational speed of 3000 rpm, i=10.

Any product models and parameters in this sample are subject to change without prior notice. Please confirm with the company before ordering.

TBR142 Series

TBR142 One Stage

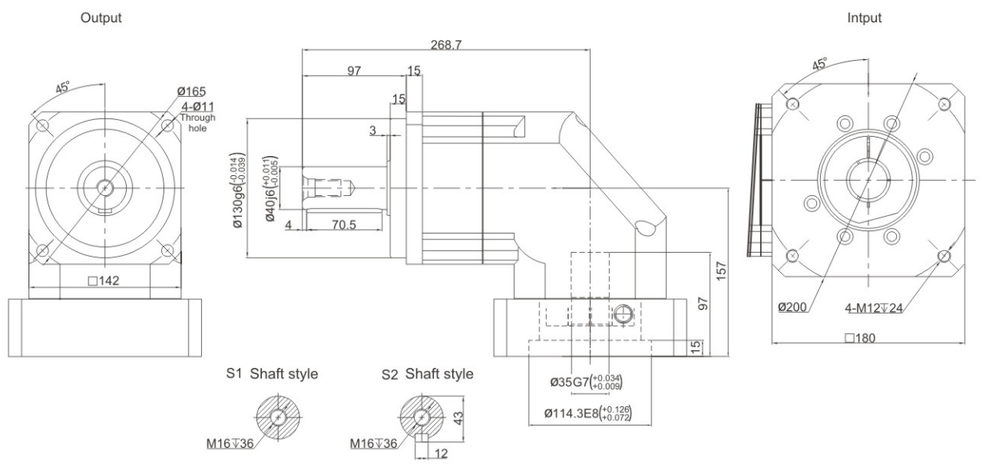

TBR142 Two Stage

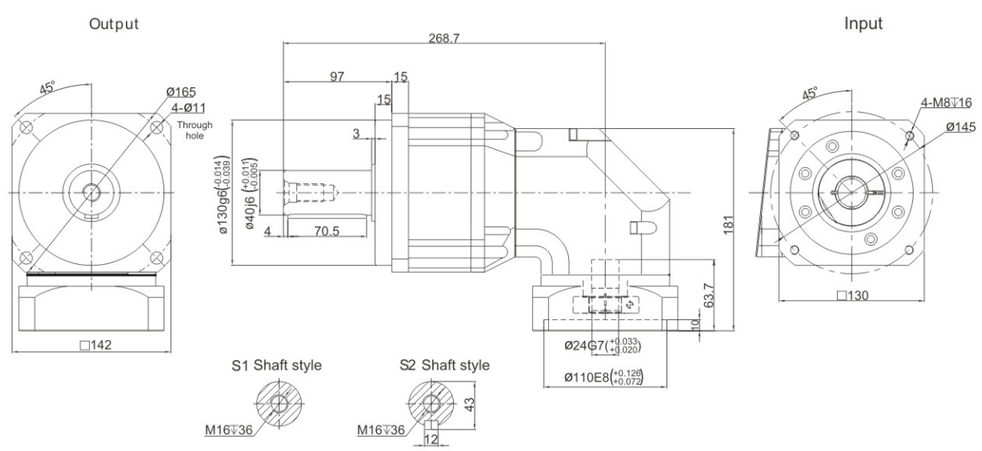

Performance Data

The TBR series reducer adopts a standardized flange interface. The installation is convenient and quick. Due to its integral structure design, this high-precision model can operate excellently in many demanding working application.

TBR142			One Stage												Two Stage													
Speed Ratio	i		3	4	5	6	7	8	9	10	12	14	16	20	25	30	35	40	50	60	70	80	100	120	140	160	180	200
Norminal Output Torque	T_1	Nm	342	520	650	600	550	500	-	450	600	550	500	450	650	600	550	500	650	600	550	500	450	600	550	550	-	450
Emergency Stop Torque	T_2	Nm	T_1×3												T_1×3													
Norminal Input Speed	S_1	rpm	3000												3000													
Maximum Input Speed	S_2	rpm	6000												6000													
Maximum Output Torque	T_4	Nm	T_1×3×60%												T_1×3×60%													
Maximum Radial Force	F_a	N	9400												9400													
Maximum Axial Force	F_b	N	4700												4700													
Torsional Rigidity	–	Nm/arcmin	50												50													
Effciency	η	%	⩾95												⩾92													
Service Life	–	h	20000												20000													
Noise	–	dB	⩽70												⩽70													
Weight	–	Kg	24.5												27.5													
Backlash	P0	arcmin	⩽2												⩽4													
	P1		⩽4												⩽7													
	P2		⩽6												⩽9													
Operating Temperature	–	℃	-20~90												-20~90													
Lubrication	–		Synthetic Grease												Synthetic Grease													
Protection Class	–		IP65												IP65													
Mounting Position	–		Any Direaction												Any Direaction													
Moment of Inertia	J	kg.cm²	23.4						21.8						6.84							6.25						

Notes:

- Speed ratio (i=Sin/Sout)
- When the output speed is 100 rpm, it acts on the center of the output shaft.
- For continous operation, the service life is no lessthan 10,000 hours.
- The noise value was measured based on the input rotational speed of 3000 rpm, i=10.

TBR Series - High Speed and Precision

TBR180 Series

TBR180 One Stage

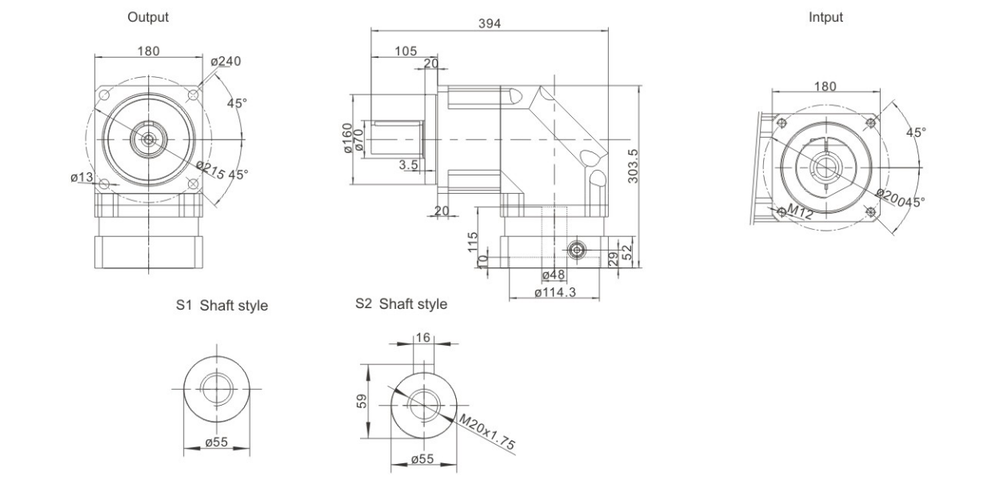

TBR180 Two Stage

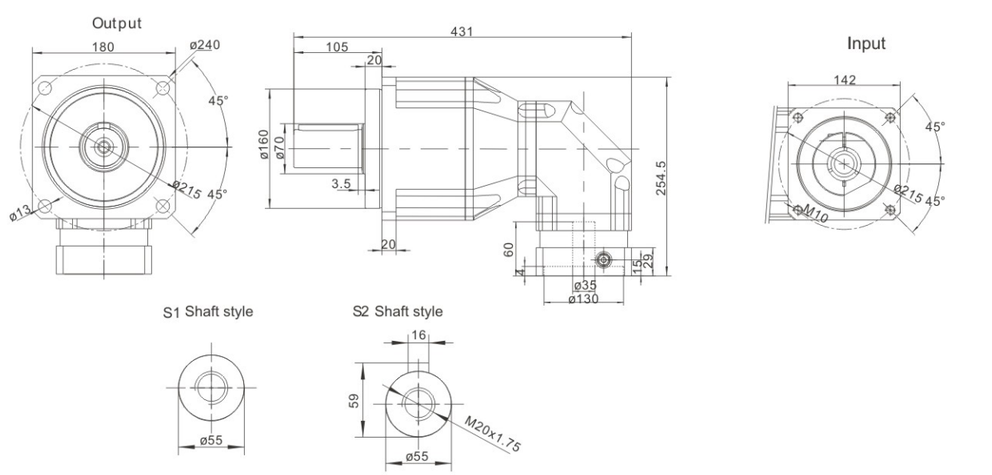

Performance Data

The TBR series reducer adopts a standardized flange interface. The installation is convenient and quick. Due to its integral structure design, this high-precision model can operate excellently in many demanding working application.

TBR180			One Stage																																					
Speed Ratio	i		3	4	5	6	7	8	9	10	12	14	16	20	25	30	35	40	50	60	70	80	100	120	140	160	180	200												
Norminal Output Torque	T_1	Nm	588	1040	1200	1100	1100	1000	-	900	1100	1100	1000	900	1200	1100	1100	1000	1200	1100	1100	1000	900	1100	1100	1000	-	900												
Emergency Stop Torque	T_2	Nm	$T_1 \times 3$												$T_1 \times 3$																									
Norminal Input Speed	S_1	rpm	3000												3000																									
Maximum Input Speed	S_2	rpm	6000												6000																									
Maximum Output Torque	T_4	Nm	$T_1 \times 3 \times 60\%$												$T_1 \times 3 \times 60\%$																									
Maximum Radial Force	F_a	N	14500												14500																									
Maximum Axial Force	F_b	N	7250												7250																									
Torsional Rigidity	–	Nm/arcmin	145												145																									
Effciency	η	%	⩾95												⩾92																									
Service Life	–	h	20000												20000																									
Noise	–	dB	⩽72												⩽72																									
Weight	–	Kg	51												54																									
Backlash	P0	arcmin	⩽2												⩽4																									
	P1		⩽4												⩽7																									
	P2		⩽6												⩽9																									
Operating Temperature	–	℃	-20~90												-20~90																									
Lubrication	–		Synthetic Grease												Synthetic Grease																									
Protection Class	–		IP65												IP65																									
Mounting Position	–		Any Direaction												Any Direaction																									
Moment of Inertia	J	kg.cm²	68.9						65.6						23.4								21.8																	

Notes:

- Speed ratio (i=Sin/Sout)
- When the output speed is 100 rpm, it acts on the center of the output shaft.
- For continous operation, the service life is no lessthan 10,000 hours.
- The noise value was measured based on the input rotational speed of 3000 rpm, i=10.

Any product models and parameters in this sample are subject to change without prior notice. Please confirm with the company before ordering.