Precision Planetary Reducer

Creative Structure Design

+

TE/TER SERIES

+

Optimized Backlash & High Rigidity

TE series planetary reducer combines innovation, efficiency and quality, maximizing customer value and performance.

GEARKO

DRIVES THE PRECISION

TE Series - High Precision Planetary Reducer

TE050 Series

TE050 One Stage

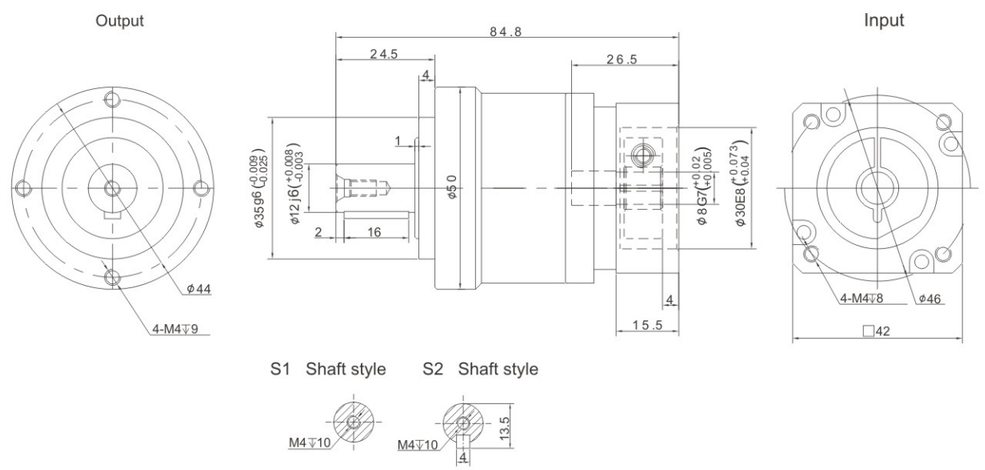

TE050 Two Stage

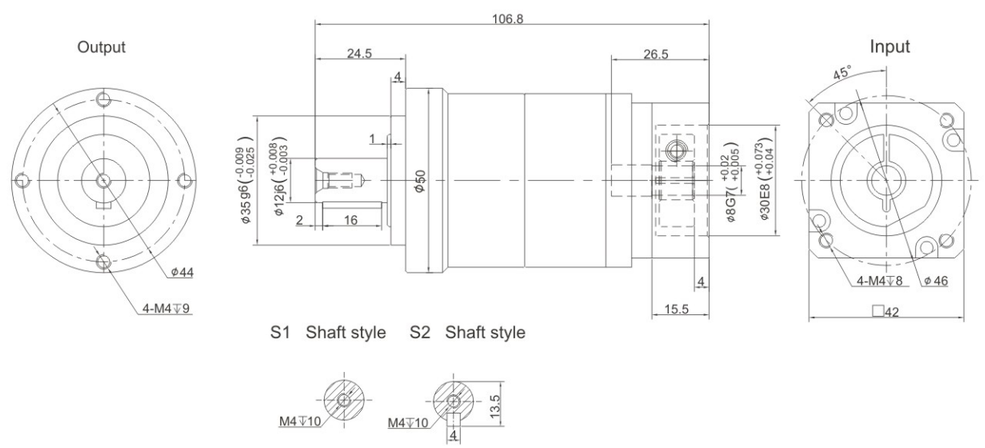

Performance Data

TE series offer additional installation flexibility in addition to TB series but with zero compromise in performance. It is with high precision and robust design.

TE050			One Stage								Two Stage									
Speed Ratio	i		-	4	5	6	7	8	9	10	-	20	25	30	35	40	50	60	70	80	100
Norminal Output Torque	T_1	Nm	-	19	22	20	19	17	-	14	-	19	22	20	19	17	22	20	19	17	14
Emergency Stop Torque	T_2	Nm	$T_1\times3$								$T_1\times3$										
Norminal Input Speed	S_1	rpm	5000								5000										
Maximum Input Speed	S_2	rpm	10000								10000										
Maximum Output Torque	T_4	Nm	$T_1\times3\times60\%$								$T_1\times3\times60\%$										
Maximum Radial Force	F_a	N	702								702										
Maximum Axial Force	F_b	N	390								390										
Torsional Rigidity	–	Nm/arcmin	3								3										
Effciency	η	%	⩾97								⩾94										
Service Life	–	h	20000								20000										
Noise	–	dB	⩽56								⩽56										
Weight	–	Kg	0.6								0.9										
Backlash	P0	arcmin	–								–										
	P1		⩽3								⩽5										
	P2		⩽5								⩽7										
Operating Temperature	–	℃	-20~90								-20~90										
Lubrication	–		Synthetic Grease								Synthetic Grease										
Protection Class	–		IP65								IP65										
Mounting Position	–		Any Direction								Any Direction										
Moment of Inertia	J	kg.cm²	0.03								0.03										

Notes:

- Speed ratio (i=Sin/Sout)
- When the output speed is 100 rpm, it acts on the center of the output shaft.
- For continous operation, the service life is no lessthan 10,000 hours.
- The noise value was measured based on the input rotational speed of 3000 rpm, i=10.

Any product models and parameters in this sample are subject to change without prior notice. Please confirm with the company before ordering.

TE Series - High Precision Planetary Reducer

TE070 Series

TE070 One Stage

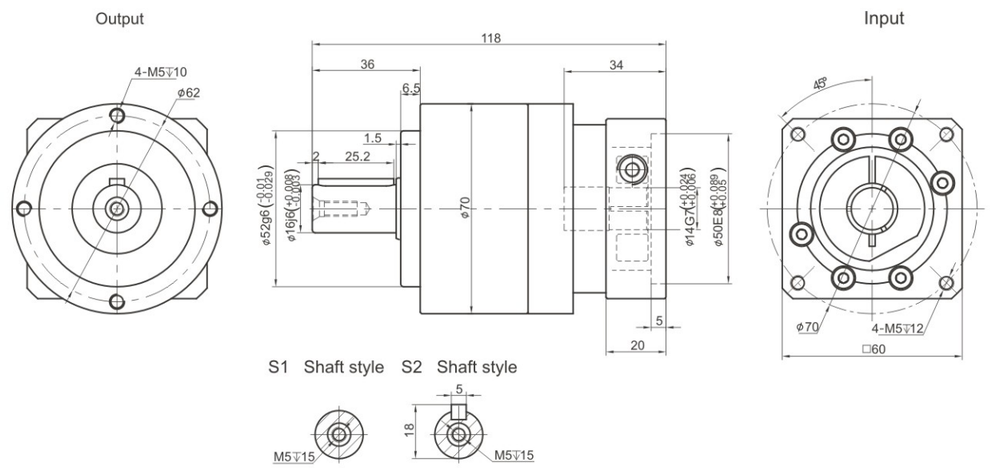

TE070 Two Stage

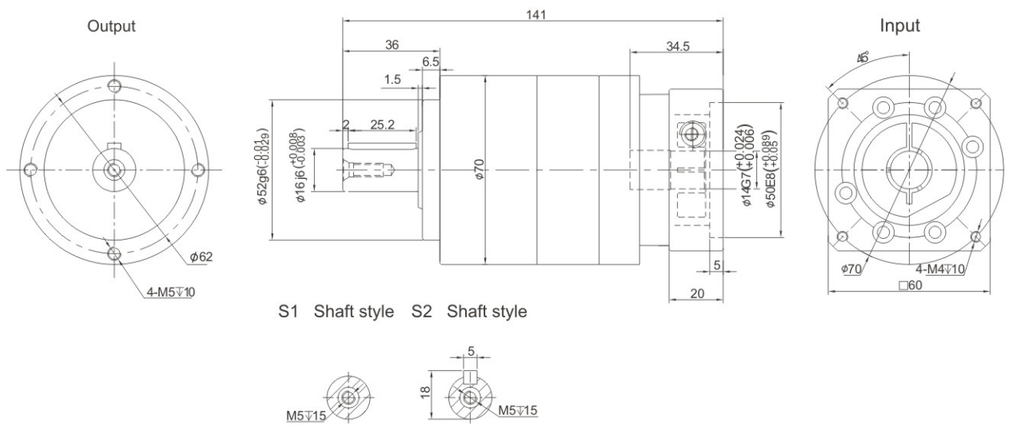

Performance Data

TE series offer additional installation flexibility in addition to TB series but with zero compromise in performance. It is with high precision and robust design.

TE070			One Stage								Two Stage										
Speed Ratio	i		3	4	5	6	7	8	9	10	15	20	25	30	35	40	50	60	70	80	100
Norminal Output Torque	T_1	Nm	55	50	60	55	50	45	-	40	55	50	60	55	50	45	60	55	50	45	40
Emergency Stop Torque	T_2	Nm	$T_1 \times 3$								$T_1 \times 3$										
Norminal Input Speed	S_1	rpm	5000								5000										
Maximum Input Speed	S_2	rpm	10000								10000										
Maximum Output Torque	T_4	Nm	$T_1 \times 3 \times 60\%$								$T_1 \times 3 \times 60\%$										
Maximum Radial Force	F_a	N	1377								1377										
Maximum Axial Force	F_b	N	765								765										
Torsional Rigidity	–	Nm/arcmin	7								7										
Effciency	η	%	≥97								≥94										
Service Life	–	h	20000								20000										
Noise	–	dB	≤58								≤58										
Weight	–	Kg	1.4								1.6										
Backlash	P0	arcmin	–								–										
	P1		≤3								≤5										
	P2		≤5								≤7										
Operating Temperature	–	℃	-20~90								-20~90										
Lubrication	–		Synthetic Grease								Synthetic Grease										
Protection Class	–		IP65								IP65										
Mounting Position	–		Any Direction								Any Direction										
Moment of Inertia	J	kg.cm²	0.16	0.14	0.13						0.03										

Notes:

- Speed ratio (i=Sin/Sout)
- When the output speed is 100 rpm, it acts on the center of the output shaft.
- For continous operation, the service life is no lessthan 10,000 hours.
- The noise value was measured based on the input rotational speed of 3000 rpm, i=10.

Any product models and parameters in this sample are subject to change without prior notice. Please confirm with the company before ordering.

TE Series - High Precision Planetary Reducer

TE090 Series

TE090 One Stage

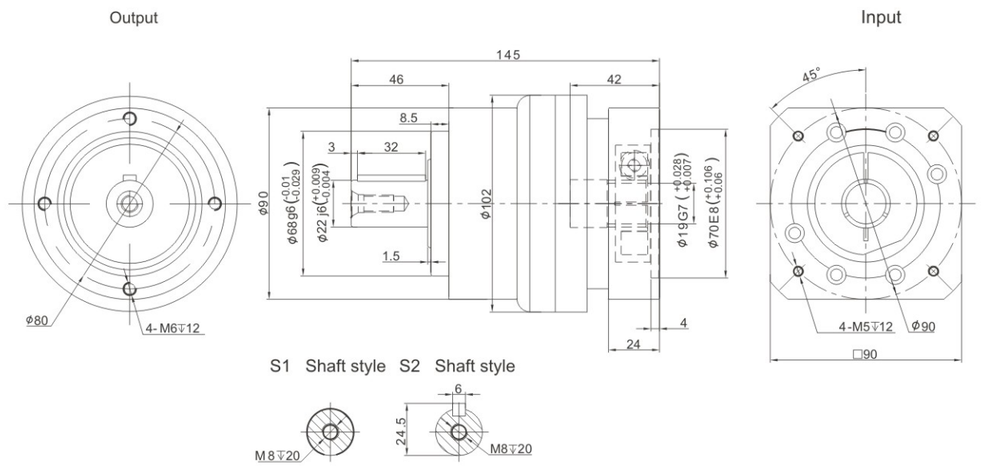

TE090 Two Stage

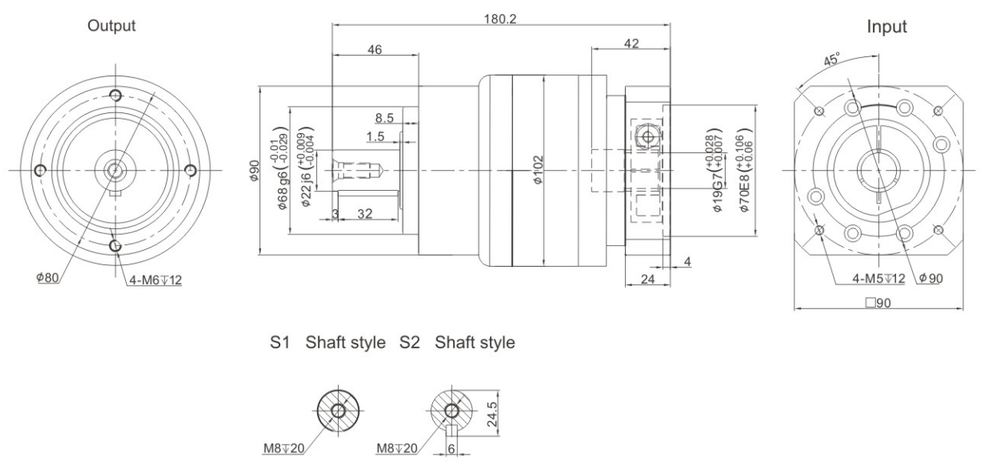

Performance Data

TE series offer additional installation flexibility in addition to TB series but with zero compromise in performance. It is with high precision and robust design.

TE090			One Stage								Two Stage									
Speed Ratio		i	3	4	5	6	7	8	9	10	15	20	25	30	35	40	50	60	70	80	100
Norminal Output Torque	T_1	Nm	130	140	160	150	140	120	-	100	130	140	160	150	140	120	160	150	140	120	100
Emergency Stop Torque	T_2	Nm	$T_1 \times 3$								$T_1 \times 3$										
Norminal Input Speed	S_1	rpm	4000								4000										
Maximum Input Speed	S_2	rpm	8000								8000										
Maximum Output Torque	T_4	Nm	$T_1 \times 3 \times 60\%$								$T_1 \times 3 \times 60\%$										
Maximum Radial Force	F_a	N	2985								2985										
Maximum Axial Force	F_b	N	1625								1625										
Torsional Rigidity	–	Nm/arcmin	14								14										
Effciency	η	%	⩾97								⩾94										
Service Life	–	h	20000								20000										
Noise	–	dB	⩽60								⩽60										
Weight	–	Kg	3.3								4.7										
Backlash	P0	arcmin	–								–										
	P1		⩽3								⩽5										
	P2		⩽5								⩽7										
Operating Temperature	–	℃	-20~90								-20~90										
Lubrication		–	Synthetic Grease								Synthetic Grease										
Protection Class		–	IP65								IP65										
Mounting Position		–	Any Direction								Any Direction										
Moment of Inertia	J	kg.cm²	0.61	0.48	0.47	0.45		0.44			0.13										

Notes:

- Speed ratio (i=Sin/Sout)
- When the output speed is 100 rpm, it acts on the center of the output shaft.
- For continous operation, the service life is no lessthan 10,000 hours.
- The noise value was measured based on the input rotational speed of 3000 rpm, i=10.

Any product models and parameters in this sample are subject to change without prior notice. Please confirm with the company before ordering.

TE Series - High Precision Planetary Reducer

TE120 Series

TE120 One Stage

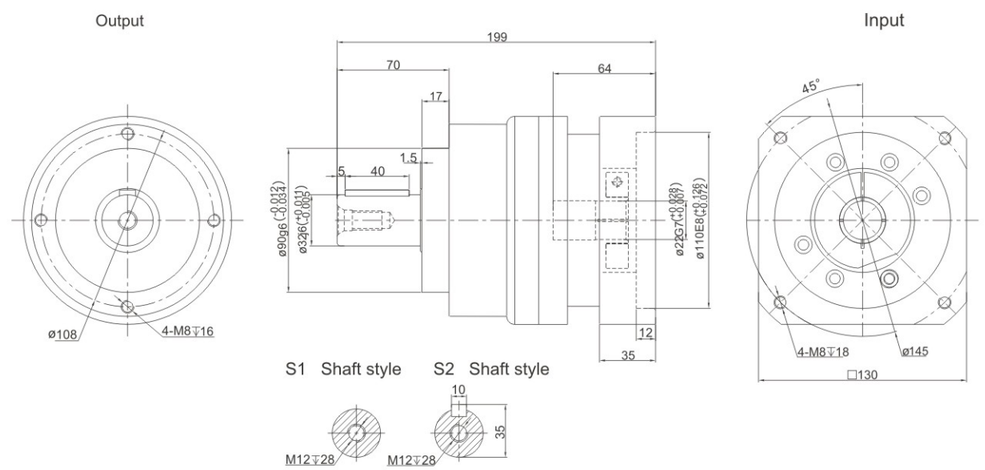

TE120 Two Stage

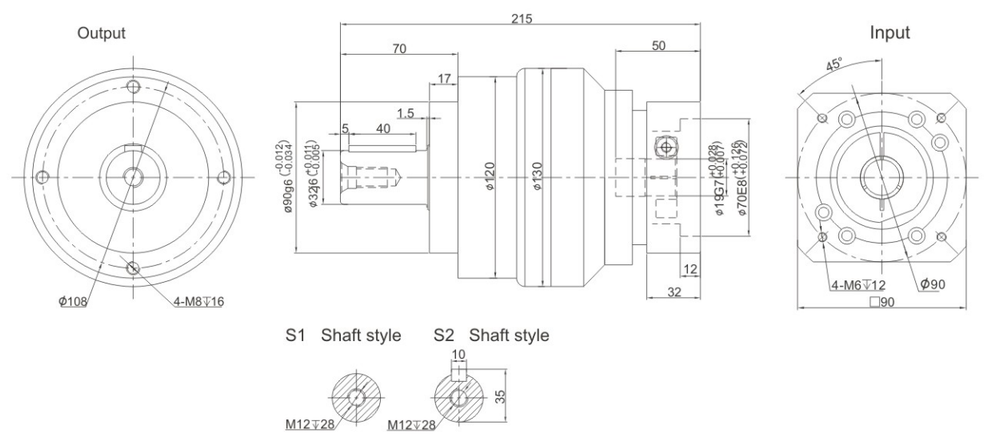

Performance Data

TE series offer additional installation flexibility in addition to TB series but with zero compromise in performance. It is with high precision and robust design.

TE120			One Stage								Two Stage									
Speed Ratio		i	3	4	5	6	7	8	9	10	15	20	25	30	35	40	50	60	70	80	100
Norminal Output Torque	T_1	Nm	208	290	330	310	300	260	-	230	208	290	330	310	300	260	330	310	300	260	230
Emergency Stop Torque	T_2	Nm	$T_1 \times 3$								$T_1 \times 3$										
Norminal Input Speed	S_1	rpm	4000								4000										
Maximum Input Speed	S_2	rpm	8000								8000										
Maximum Output Torque	T_4	Nm	$T_1 \times 3 \times 60\%$								$T_1 \times 3 \times 60\%$										
Maximum Radial Force	F_a	N	6100								6100										
Maximum Axial Force	F_b	N	3350								3350										
Torsional Rigidity	–	Nm/arcmin	25								25										
Effciency	η	%	⩾97								⩾94										
Service Life	–	h	20000								20000										
Noise	–	dB	⩽63								⩽63										
Weight	–	Kg	6.9								8.7										
Backlash	P0	arcmin	–								–										
	P1		⩽3								⩽5										
	P2		⩽5								⩽7										
Operating Temperature	–	℃	-20~90								-20~90										
Lubrication	–		Synthetic Grease								Synthetic Grease										
Protection Class	–		IP65								IP65										
Mounting Position	–		Any Direction								Any Direction										
Moment of Inertia	J	kg.cm²	3.25	2.74	2.71	2.65	2.62	2.58	-	2.57	0.47						0.44				

Notes:

- Speed ratio (i=Sin/Sout)
- When the output speed is 100 rpm, it acts on the center of the output shaft.
- For continous operation, the service life is no lessthan 10,000 hours.
- The noise value was measured based on the input rotational speed of 3000 rpm, i=10.

Any product models and parameters in this sample are subject to change without prior notice. Please confirm with the company before ordering.

TE Series - High Precision Planetary Reducer

TE155 Series

TE155 One Stage

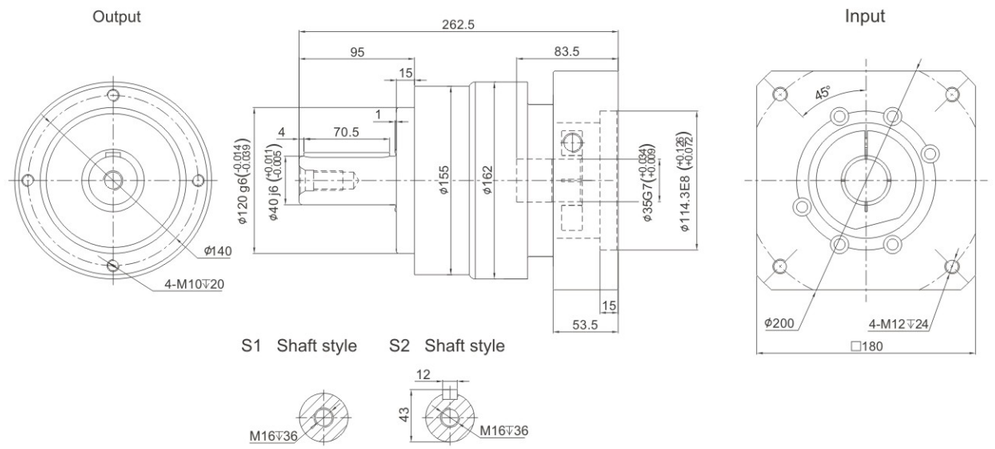

TE155 Two Stage

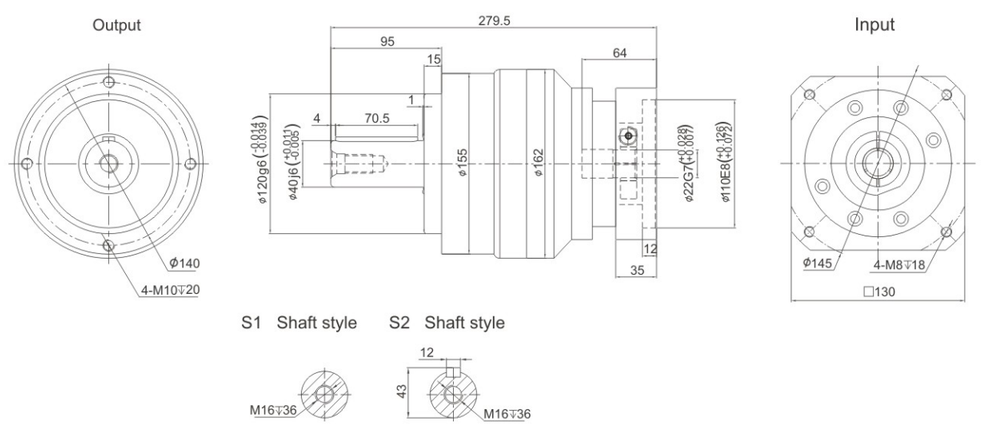

Performance Data

TE series offer additional installation flexibility in addition to TB series but with zero compromise in performance. It is with high precision and robust design.

TE155			One Stage								Two Stage										
Speed Ratio		i	3	4	5	6	7	8	9	10	15	20	25	30	35	40	50	60	70	80	100
Norminal Output Torque	T_1	Nm	342	542	650	600	550	500	-	450	342	542	650	600	550	500	650	600	550	500	450
Emergency Stop Torque	T_2	Nm	$T_1 \times 3$								$T_1 \times 3$										
Norminal Input Speed	S_1	rpm	3000								3000										
Maximum Input Speed	S_2	rpm	6000								6000										
Maximum Output Torque	T_4	Nm	$T_1 \times 3 \times 60\%$								$T_1 \times 3 \times 60\%$										
Maximum Radial Force	F_a	N	8460								8460										
Maximum Axial Force	F_b	N	4700								4700										
Torsional Rigidity	–	Nm/arcmin	50								50										
Effciency	η	%	≥97								≥94										
Service Life	–	h	20000								20000										
Noise	–	dB	≤65								≤65										
Weight	–	Kg	13								17										
Backlash	P0	arcmin	–								–										
	P1		≤3								≤5										
	P2		≤5								≤7										
Operating Temperature	–	℃	-20~90								-20~90										
Lubrication	–		Synthetic Grease								Synthetic Grease										
Protection Class	–		IP65								IP65										
Mounting Position	–		Any Direction								Any Direction										
Moment of Inertia	J	kg.cm²	9.21	7.54	7.42	7.25	7.14	7.07	-	7.03	2.71				2.57						

Notes:

- Speed ratio (i=Sin/Sout)
- When the output speed is 100 rpm, it acts on the center of the output shaft.
- For continous operation, the service life is no lessthan 10,000 hours.
- The noise value was measured based on the input rotational speed of 3000 rpm, i=10.

Any product models and parameters in this sample are subject to change without prior notice. Please confirm with the company before ordering.

TE Series - High Precision Planetary Reducer

TE205 Series

TE205 One Stage

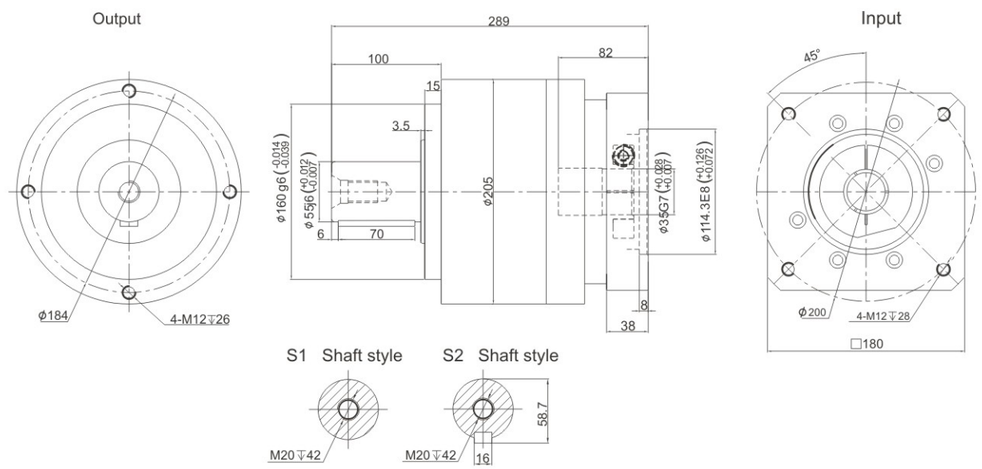

TE205 Two Stage

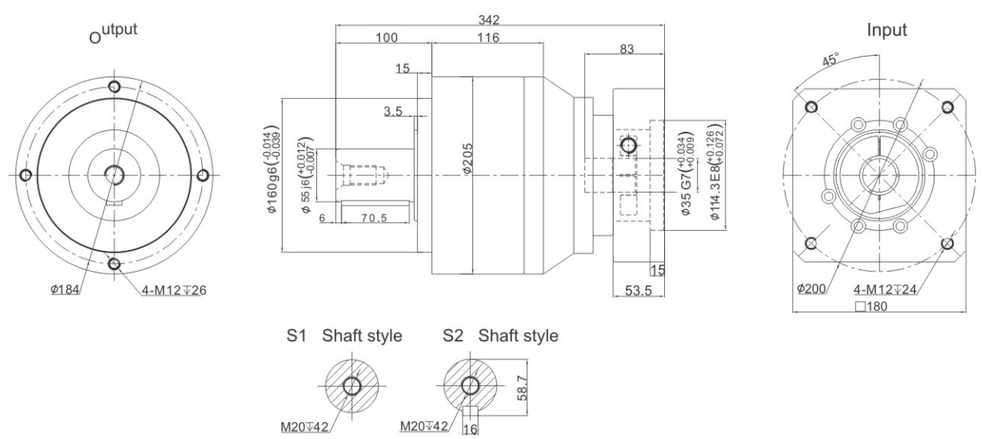

Performance Data

TE series offer additional installation flexibility in addition to TB series but with zero compromise in performance. It is with high precision and robust design.

TE205			One Stage								Two Stage									
Speed Ratio		i	3	4	5	6	7	8	9	10	15	20	25	30	35	40	50	60	70	80	100
Norminal Output Torque	T_1	Nm	588	1050	1200	1100	1100	1000	-	900	588	1050	1200	1100	1100	1000	1200	1100	1100	1000	900
Emergency Stop Torque	T_2	Nm	$T_1 \times 3$								$T_1 \times 3$										
Norminal Input Speed	S_1	rpm	3000								3000										
Maximum Input Speed	S_2	rpm	6000								6000										
Maximum Output Torque	T_4	Nm	$T_1 \times 3 \times 60\%$								$T_1 \times 3 \times 60\%$										
Maximum Radial Force	F_a	N	13050								13050										
Maximum Axial Force	F_b	N	7250								7250										
Torsional Rigidity	–	Nm/arcmin	145								145										
Effciency	η	%	⩾97								⩾94										
Service Life	–	h	20000								20000										
Noise	–	dB	⩽67								⩽67										
Weight	–	Kg	31								35										
Backlash	P0	arcmin	–								–										
	P1		⩽3								⩽5										
	P2		⩽5								⩽7										
Operating Temperature	–	℃	-20~90								-20~90										
Lubrication	–		Synthetic Grease								Synthetic Grease										
Protection Class	–		IP65								IP65										
Mounting Position	–		Any Direction								Any Direction										
Moment of Inertia	J	kg.cm²	28.98	23.67	23.29	22.75	22.48	22.59	-	22.51	7.42					7.03					

Notes:

- Speed ratio (i=Sin/Sout)
- When the output speed is 100 rpm, it acts on the center of the output shaft.
- For continous operation, the service life is no lessthan 10,000 hours.
- The noise value was measured based on the input rotational speed of 3000 rpm, i=10.

Any product models and parameters in this sample are subject to change without prior notice. Please confirm with the company before ordering.

TE Series - High Precision Planetary Reducer

TE235 Series

TE235 One Stage

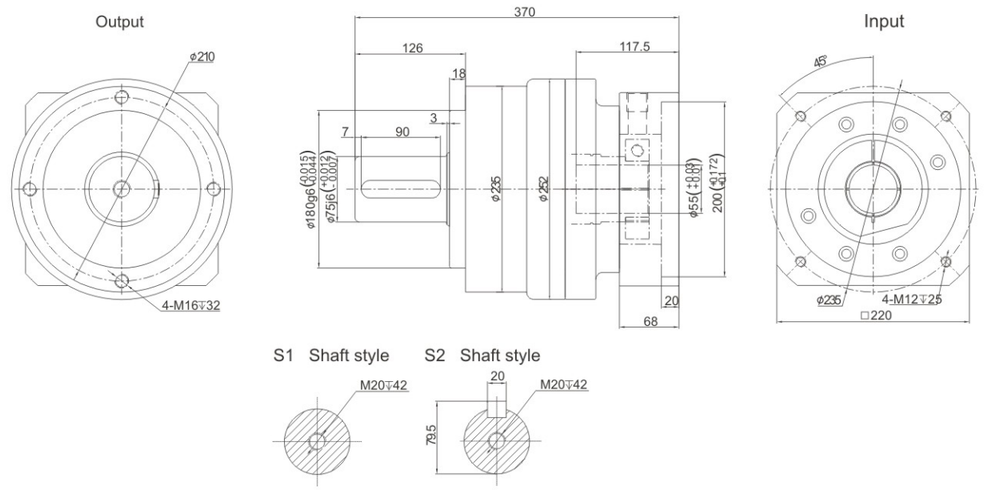

TE235 Two Stage

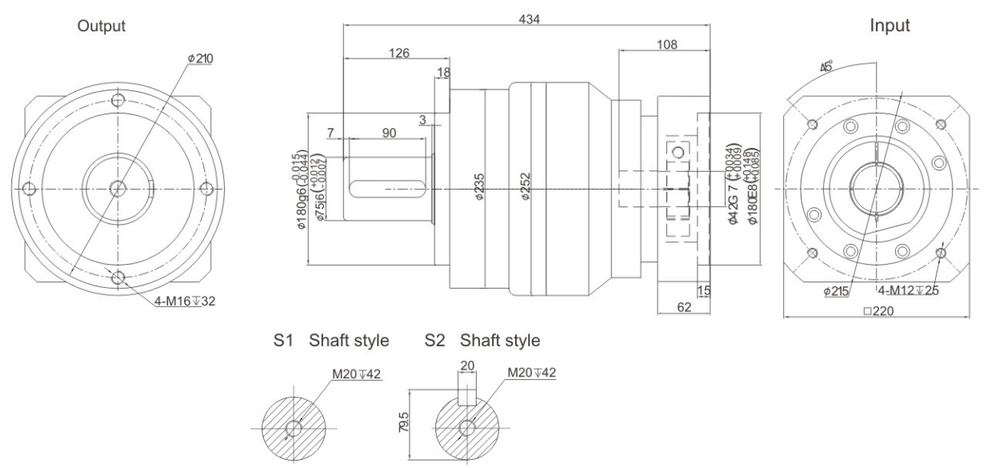

Performance Data

TE series offer additional installation flexibility in addition to TB series but with zero compromise in performance. It is with high precision and robust design.

TE235			One Stage								Two Stage									
Speed Ratio		i	3	4	5	6	7	8	9	10	15	20	25	30	35	40	50	60	70	80	100
Norminal Output Torque	T_1	Nm	1140	1700	2000	1900	1800	1600	-	1500	1140	1700	2000	1900	1800	1600	2000	1900	1800	1600	1500
Emergency Stop Torque	T_2	Nm	$T_1 \times 3$								$T_1 \times 3$										
Norminal Input Speed	S_1	rpm	2000								2000										
Maximum Input Speed	S_2	rpm	4000								4000										
Maximum Output Torque	T_4	Nm	$T_1 \times 3 \times 60\%$								$T_1 \times 3 \times 60\%$										
Maximum Radial Force	F_a	N	48700								48700										
Maximum Axial Force	F_b	N	18000								18000										
Torsional Rigidity	-	Nm/arcmin	225								225										
Effciency	η	%	⩾97								⩾94										
Service Life	–	h	20000								20000										
Noise	–	dB	⩽70								⩽70										
Weight	–	Kg	53								66										
Backlash	P0	arcmin	-								-										
	P1		⩽3								⩽5										
	P2		⩽5								⩽7										
Operating Temperature	–	℃	-20~90								-20~90										
Lubrication	–		Synthetic Grease								Synthetic Grease										
Protection Class	–		IP65								IP65										
Mounting Position	–		Any Direction								Any Direction										
Moment of Inertia	J	kg.cm²	69.61	54.37	53.27	51.72	50.97	50.84	–	50.56	23.29					22.51					

Notes:

- Speed ratio (i=Sin/Sout)
- When the output speed is 100 rpm, it acts on the center of the output shaft.
- For continous operation, the service life is no lessthan 10,000 hours.
- The noise value was measured based on the input rotational speed of 3000 rpm, i=10.

Any product models and parameters in this sample are subject to change without prior notice. Please confirm with the company before ordering.

TER070 Series

TER070 One Stage

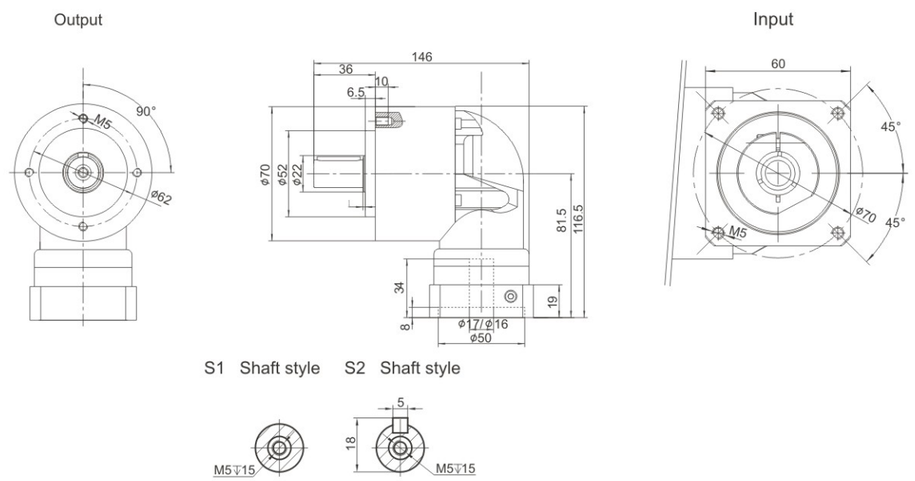

TER070 Two Stage

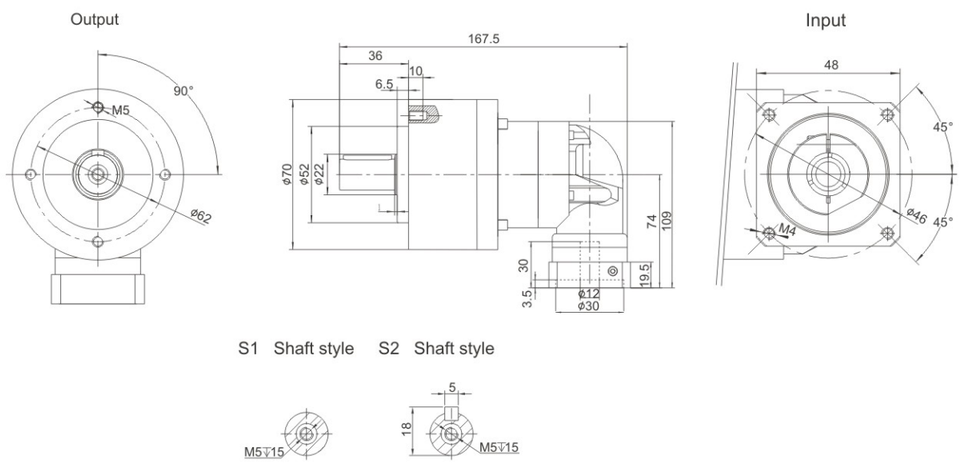

Performance Data

TER series offer additional installation flexibility in addition to TB series but with zero compromise in performance. It is with high precision and robust design.

TER070			One Stage																								Two Stage
Speed Ratio		i	3	4	5	6	7	8	9	10	14	20	25	30	35	40	50	60	70	80	100	120	140	160	180	200	
Norminal Output Torque	T_1	Nm	36	48	60	55	50	45	-	40	42	40	60	55	50	45	60	55	50	45	40	50	55	55	-	40	
Emergency Stop Torque	T_2	Nm	$T_1 \times 3$										$T_1 \times 3$														
Norminal Input Speed	S_1	rpm	5000										5000														
Maximum Input Speed	S_2	rpm	10000										10000														
Maximum Output Torque	T_4	Nm	$T_1 \times 3 \times 60\%$										$T_1 \times 3 \times 60\%$														
Maximum Radial Force	F_a	N	1377										1377														
Maximum Axial Force	F_b	N	765										765														
Torsional Rigidity	–	Nm/arcmin	7										7														
Effciency	η	%	⩾95										⩾92														
Service Life	–	h	20000										20000														
Noise	–	dB	⩽63										⩽63														
Weight	–	Kg	2.1										2.4														
Backlash	P0	arcmin	–										–														
	P1		⩽4										⩽7														
	P2		⩽6										⩽9														
Operating Temperature	–	℃	-20~90										-20~90														
Lubrication	–		Synthetic Grease										Synthetic Grease														
Protection Class	–		IP65										IP65														
Mounting Position	–		Any Direction										Any Direction														
Moment of Inertia	J	kg.cm²	0.35							0.07			0.09														

Notes:

- Speed ratio (i=Sin/Sout)
- When the output speed is 100 rpm, it acts on the center of the output shaft.
- For continous operation, the service life is no lessthan 10,000 hours.
- The noise value was measured based on the input rotational speed of 3000 rpm, i=10.

Any product models and parameters in this sample are subject to change without prior notice. Please confirm with the company before ordering.

TER090 Series

TER090 One Stage

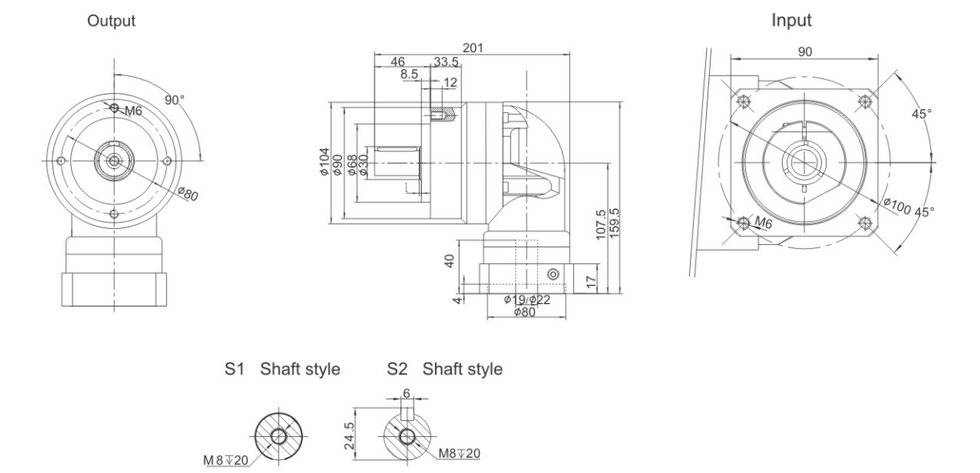

TER090 Two Stage

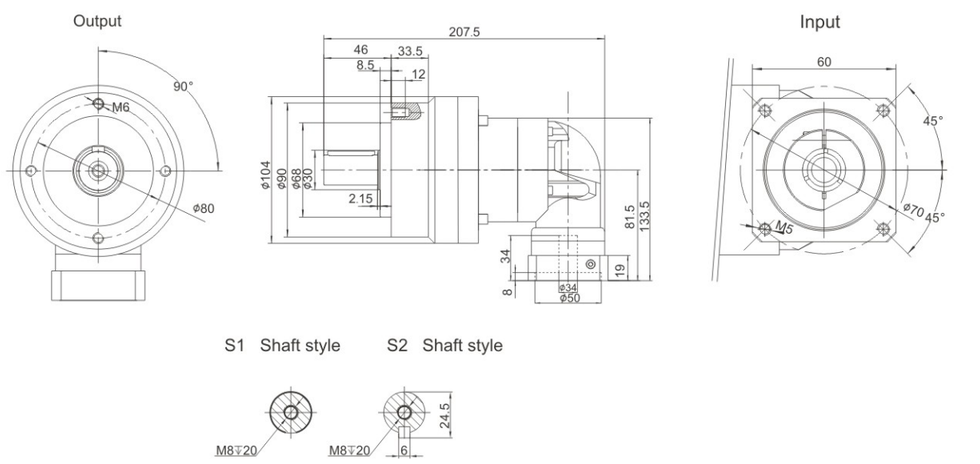

Performance Data

TER series offer additional installation flexibility in addition to TB series but with zero compromise in performance. It is with high precision and robust design.

TER090			One Stage																											
Speed Ratio	i		3	4	5	6	7	8	9	10	14	20	25	30	35	40	50	60	70	80	100	120	140	160	180	200				
Norminal Output Torque	T_1	Nm	90	120	150	150	140	120	-	100	140	100	150	150	140	120	100	150	140	120	100	150	140	120	-	100				
Emergency Stop Torque	T_2	Nm	$T_1 \times 3$																$T_1 \times 3$											
Norminal Input Speed	S_1	rpm	4000																4000											
Maximum Input Speed	S_2	rpm	8000																8000											
Maximum Output Torque	T_4	Nm	$T_1 \times 3 \times 60\%$																$T_1 \times 3 \times 60\%$											
Maximum Radial Force	F_a	N	2985																2985											
Maximum Axial Force	F_b	N	1625																1625											
Torsional Rigidity	–	Nm/arcmin	14																14											
Effciency	η	%	≥95																≥92											
Service Life	–	h	20000																20000											
Noise	–	dB	≤65																≤65											
Weight	–	Kg	5.8																4.6											
Backlash	P0	arcmin	–																–											
	P1		≤4																≤7											
	P2		≤6																≤9											
Operating Temperature	–	℃	-20~90																-20~90											
Lubrication	–		Synthetic Grease																Synthetic Grease											
Protection Class	–		IP65																IP65											
Mounting Position	–		Any Direction																Any Direction											
Moment of Inertia	J	kg.cm²	2.25								1.87								0.35								0.31			

Notes:

- Speed ratio (i=Sin/Sout)
- When the output speed is 100 rpm, it acts on the center of the output shaft.
- For continous operation, the service life is no lessthan 10,000 hours.
- The noise value was measured based on the input rotational speed of 3000 rpm, i=10.

Any product models and parameters in this sample are subject to change without prior notice. Please confirm with the company before ordering.

TER Series - High Precision Planetary Reducer

TER120 Series

TER120 One Stage

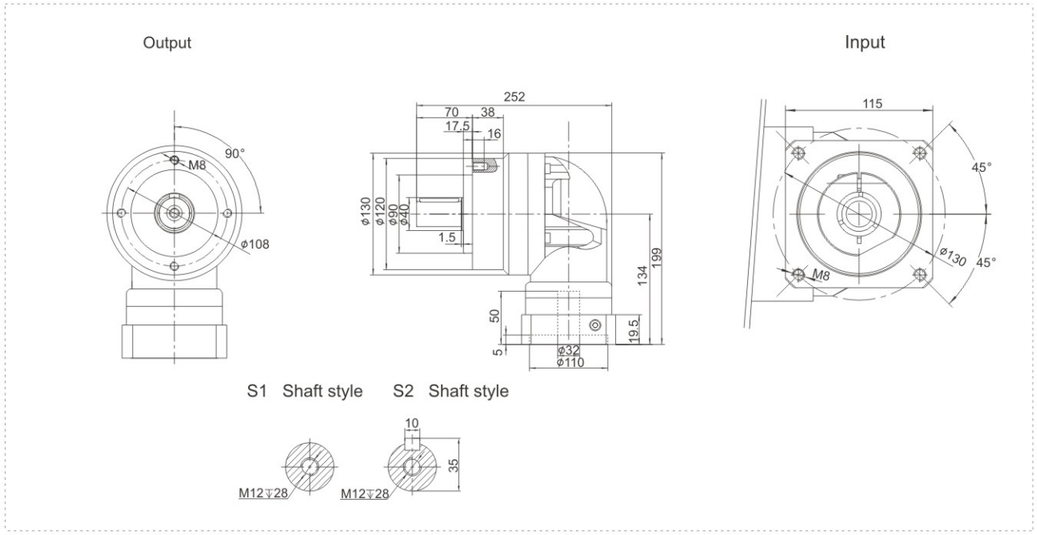

TER120 One Stage

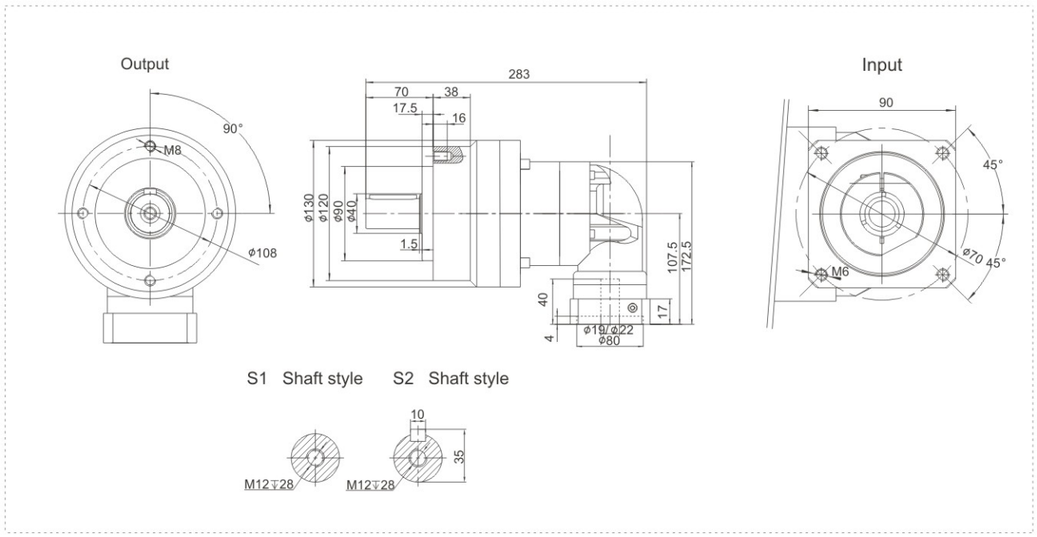

Performance Data

TER series offer additional installation flexibility in addition to TB series but with zero compromise in performance. It is with high precision and robust design.

TER120			One Stage																											
Speed Ratio		i	3	4	5	6	7	8	9	10	14	20	25	30	35	40	50	60	70	80	100	120	140	160	180	200				
Norminal Output Torque	T_1	Nm	195	260	325	310	300	260	-	230	300	230	325	310	300	260	230	310	300	260	230	310	300	260	-	230				
Emergency Stop Torque	T_2	Nm	$T_1 \times 3$													$T_1 \times 3$														
Norminal Input Speed	S_1	rpm	4000													4000														
Maximum Input Speed	S_2	rpm	8000													8000														
Maximum Output Torque	T_4	Nm	$T_1 \times 3 \times 60\%$													$T_1 \times 3 \times 60\%$														
Maximum Radial Force	F_a	N	6100													6100														
Maximum Axial Force	F_b	N	3350													3350														
Torsional Rigidity	–	Nm/arcmin	25													25														
Effciency	η	%	≥95													≥92														
Service Life	–	h	20000													20000														
Noise	–	dB	≤68													≤68														
Weight	–	Kg	11.2													11.1														
Backlash	P0	arcmin	–													–														
	P1		≤4													≤7														
	P2		≤6													≤9														
Operating Temperature	–	℃	-20~90													-20~90														
Lubrication	–		Synthetic Grease													Synthetic Grease														
Protection Class	–		IP65													IP65														
Mounting Position	–		Any Direction													Any Direction														
Moment of Inertia	J	kg.cm²	6.84							6.25						2.25													1.87	

Notes:

- Speed ratio (i=Sin/Sout)
- When the output speed is 100 rpm, it acts on the center of the output shaft.
- For continous operation, the service life is no lessthan 10,000 hours.
- The noise value was measured based on the input rotational speed of 3000 rpm, i=10.

Any product models and parameters in this sample are subject to change without prior notice. Please confirm with the company before ordering.

TER Series - High Precision Planetary Reducer

TER155 Series

TER155 One Stage

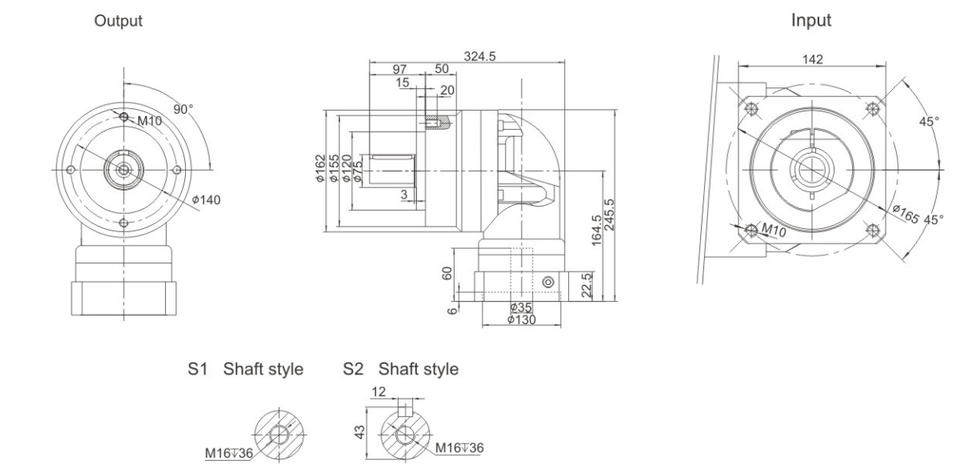

TER155 Two Stage

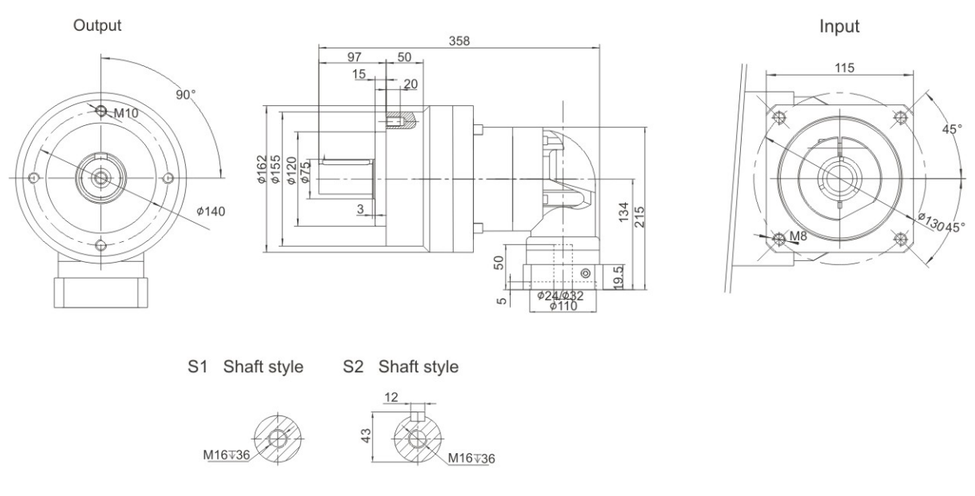

Performance Data

TER series offer additional installation flexibility in addition to TB series but with zero compromise in performance. It is with high precision and robust design.

TER155			One Stage																									Two Stage			
Speed Ratio	i		3	4	5	6	7	8	9	10	14	20	25	30	35	40	50	60	70	80	100	120	140	160	180	200					
Norminal Output Torque	T_1	Nm	342	520	650	600	550	500	-	450	550	450	650	600	550	500	650	600	550	500	450	600	550	550	-	450					
Emergency Stop Torque	T_2	Nm	$T_1 \times 3$																$T_1 \times 3$												
Norminal Input Speed	S_1	rpm	3000																3000												
Maximum Input Speed	S_2	rpm	6000																6000												
Maximum Output Torque	T_4	Nm	$T_1 \times 3 \times 60\%$																$T_1 \times 3 \times 60\%$												
Maximum Radial Force	F_a	N	8460																8460												
Maximum Axial Force	F_b	N	4700																4700												
Torsional Rigidity	–	Nm/arcmin	50																50												
Effciency	η	%	⩾95																⩾92												
Service Life	–	h	20000																20000												
Noise	–	dB	⩽70																⩽70												
Weight	–	Kg	22.4																21.8												
Backlash	P0	arcmin	–																–												
	P1		⩽4																⩽7												
	P2		⩽6																⩽9												
Operating Temperature	–	℃	-20~90																-20~90												
Lubrication	–		Synthetic Grease																Synthetic Grease												
Protection Class	–		IP65																IP65												
Mounting Position	–		Any Direction																Any Direction												
Moment of Inertia	J	kg.cm²	23.4							21.8									6.84											6.25	

Notes:

- Speed ratio (i=Sin/Sout)
- When the output speed is 100 rpm, it acts on the center of the output shaft.
- For continous operation, the service life is no lessthan 10,000 hours.
- The noise value was measured based on the input rotational speed of 3000 rpm, i=10.

Any product models and parameters in this sample are subject to change without prior notice. Please confirm with the company before ordering.

TER Series - High Precision Planetary Reducer

TER205 Series

TER205 One Stage

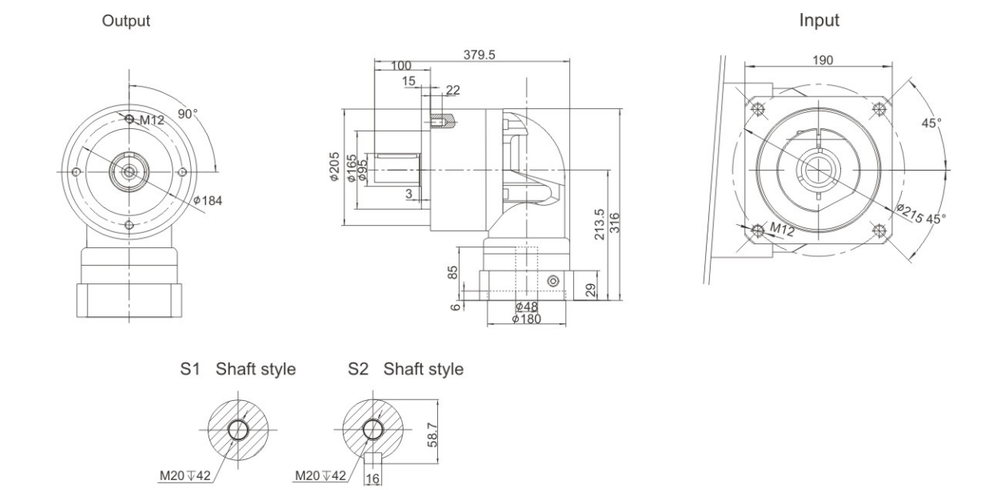

TER205 Two Stage

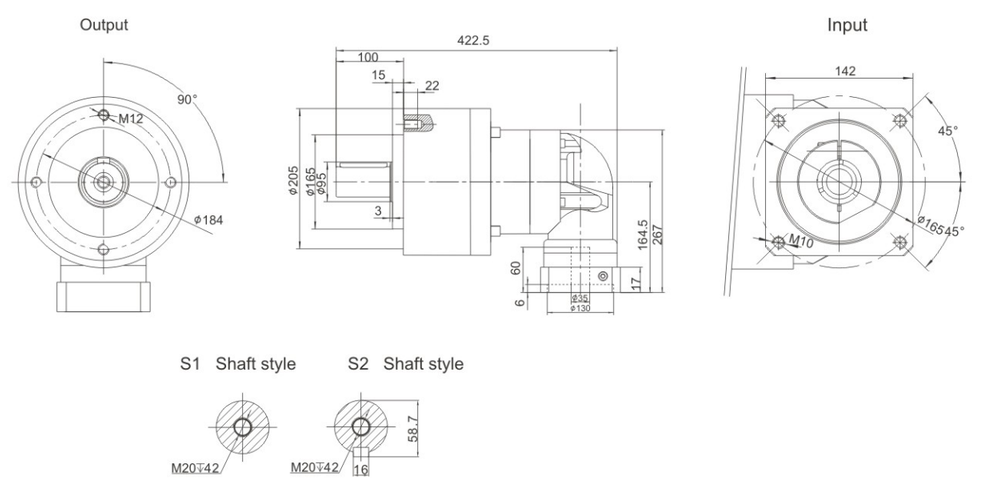

Performance Data

TER series offer additional installation flexibility in addition to TB series but with zero compromise in performance. It is with high precision and robust design.

| TER205 | | | One Stage | | |