Precision Planetary Reducer

Modular & Economical Design

+

TCB/TCBR/TCE SERIES

+

Optimized Performance

TCB/TCBR/TCE series planetary reducer backlash is low and its transmission capacity is strong, the input end can be matched with servo, stepping and any other motors.

GEARKO®

DRIVES THE PRECISION

TCB042 Series

TCB042 One Stage

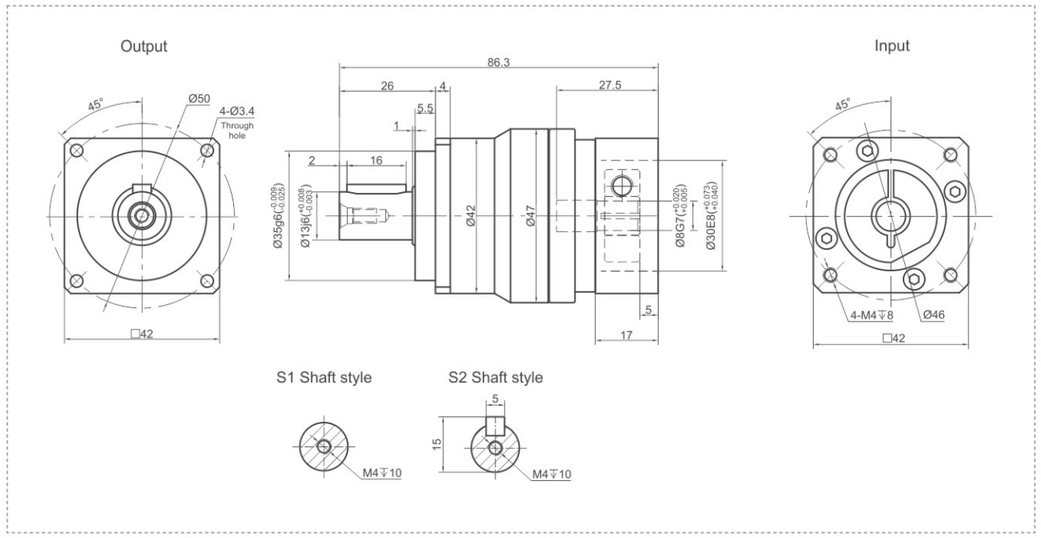

TCB042 Two Stage

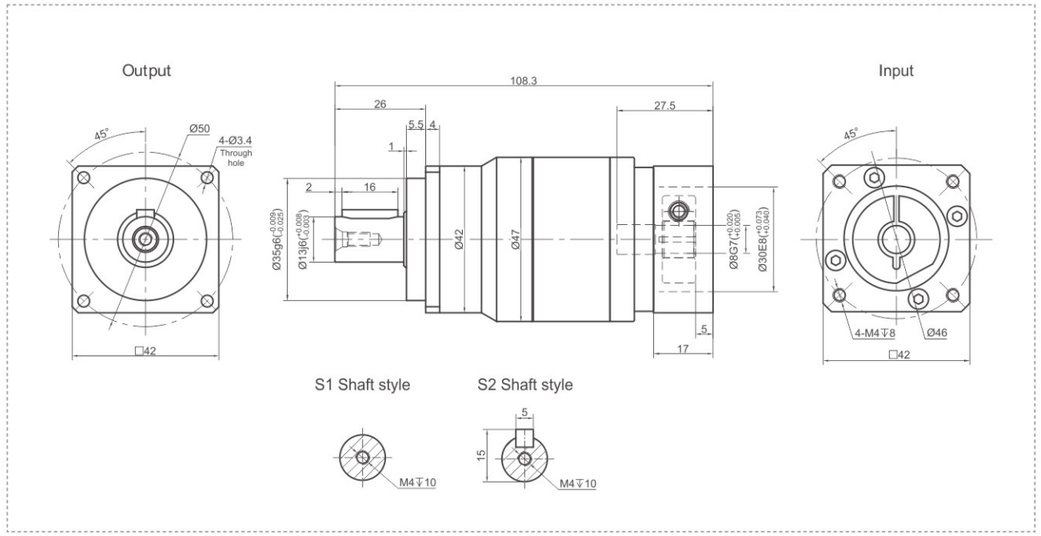

Performance Data

TCB series planetary reducer has modular design compact structure with high reliability and efficiency.
It is a perfect optimization of both performance and cost.

TCB042			One Stage								Two Stage									
Speed Ratio	i		-	4	5	6	7	8	9	10	-	20	25	30	35	40	50	60	70	80	100
Nominal Output Torque	T_1	Nm	-	17	19	18	19	16	-	14	-	17	19	18	18	16	19	18	18	16	14
Emergency Stop Torque	T_2	Nm	$T_1 \times 3$								$T_1 \times 3$										
Nominal Input Speed	S_1	rpm	3000								3000										
Maximum Input Speed	S_2	rpm	6000								6000										
Maximum Output Torque	T_4	Nm	$T_1 \times 3 \times 60\%$								$T_1 \times 3 \times 60\%$										
Maximum Radial Force	F_a	N	760								760										
Maximum Axial Force	F_b	N	380								380										
Torsional Rigidity	–	Nm/arcmin	3								3										
Efficiency	η	%	⩾97								⩾94										
Service Life	–	h	20000								20000										
Noise	–	dB	⩽56								⩽56										
Weight	–	Kg	0.5								0.7										
Backlash	P0	arcmin	–								–										
	P1		⩽3								⩽5										
	P2		⩽5								⩽7										
Operating Temperature	–	℃	-20~90								-20~90										
Lubrication	–		Synthetic Grease								Synthetic grease										
Protection Class	–		IP65								IP65										
Mounting Position	–		Any Direction								Any Direction										
Moment of Inertia	J	kg.cm²	0.03								0.03										

Notes:

- Speed ratio (i=Sin/Sout)
- When the output speed is 100 rpm, it acts on the center of the output shaft.
- For continuous operation, the service life is no less than 10,000 hours.
- The noise value was measured based on the input rotational speed of 3000 rpm, i=10.

Any product models and parameters in this sample are subject to change without prior notice. Please confirm with the company before ordering.

TCB060 Series

TCB060 One Stage

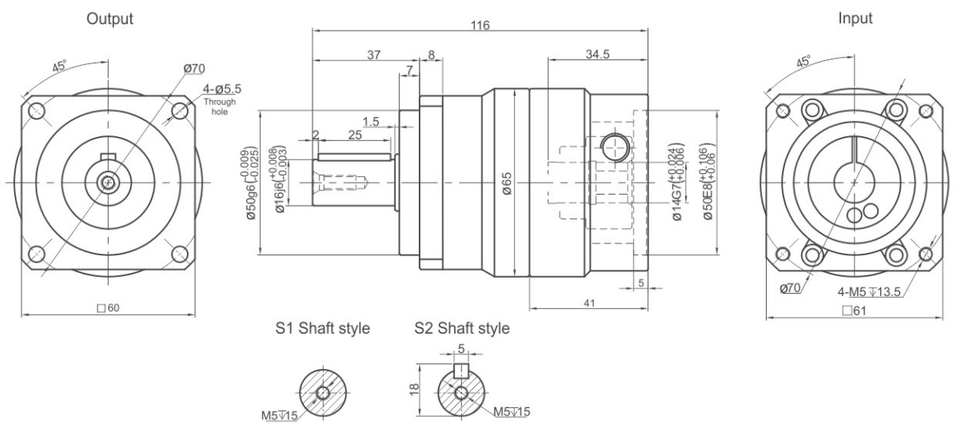

TCB060 Two Stage

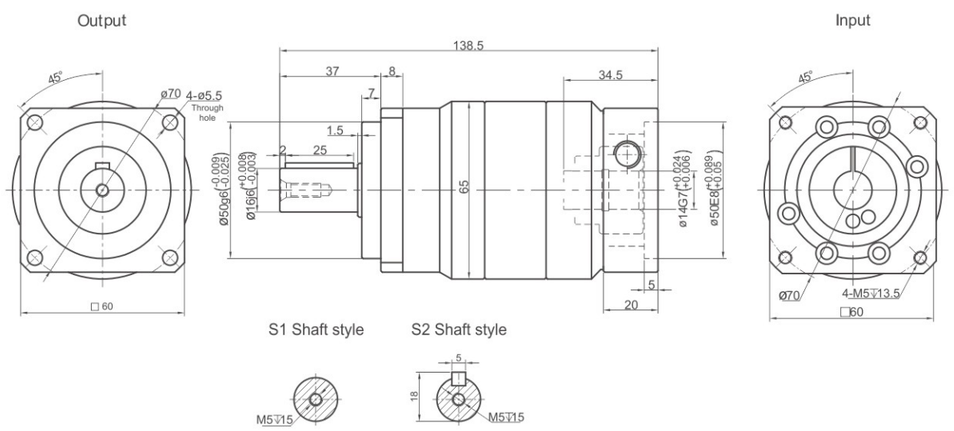

Performance Data

TCB series planetary reducer has modular design compact structure with high reliability and efficiency.
It is a perfect optimization of both performance and cost.

TCB060			One Stage									Two Stage									
Speed Ratio	i		3	4	5	6	7	8	9	10	15	20	25	30	35	40	50	60	70	80	100
Nominal Output Torque	T_1	Nm	40	45	55	50	45	45	-	35	40	45	55	50	45	45	55	50	45	45	35
Emergency Stop Torque	T_2	Nm	$T_1 \times 3$									$T_1 \times 3$									
Nominal Input Speed	S_1	rpm	3000									3000									
Maximum Input Speed	S_2	rpm	6000									6000									
Maximum Output Torque	T_4	Nm	$T_1 \times 3 \times 60\%$									$T_1 \times 3 \times 60\%$									
Maximum Radial Force	F_a	N	1530									1530									
Maximum Axial Force	F_b	N	765									765									
Torsional Rigidity	–	Nm/arcmin	7									7									
Efficiency	η	%	⩾97									⩾94									
Service Life	–	h	20000									20000									
Noise	–	dB	⩽58									⩽58									
Weight	–	Kg	1.3									1.7									
Backlash	P0	arcmin	–									–									
	P1		⩽3									⩽5									
	P2		⩽5									⩽7									
Operating Temperature	–	℃	-20~90									-20~90									
Lubrication	–		Synthetic Grease									Synthetic grease									
Protection Class	–		IP65									IP65									
Mounting Position	–		Any Direction									Any Direction									
Moment of Inertia	J	$kg.cm^2$	0.16	0.14	0.13							0.13									

Notes:

- Speed ratio (i=Sin/Sout)
- When the output speed is 100 rpm, it acts on the center of the output shaft.
- For continuous operation, the service life is no less than 10,000 hours.
- The noise value was measured based on the input rotational speed of 3000 rpm, i=10.

Any product models and parameters in this sample are subject to change without prior notice. Please confirm with the company before ordering.

TCB090 Series

TCB090 One Stage

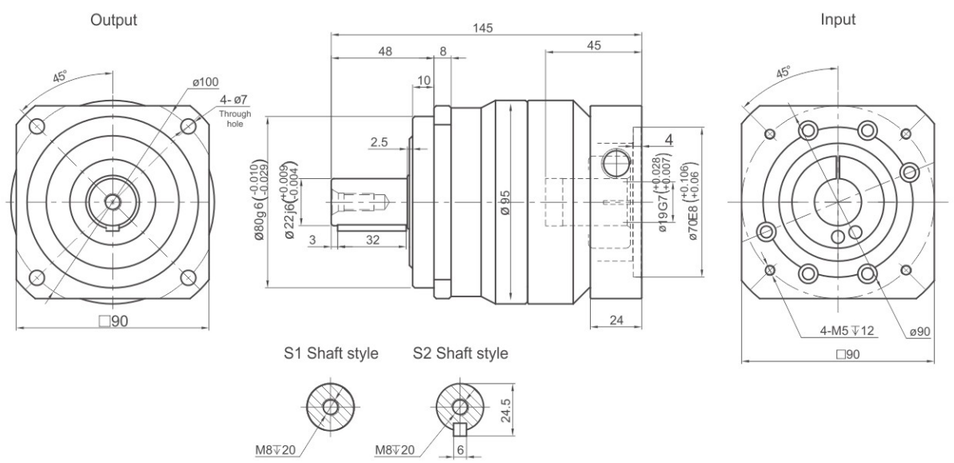

TCB090 Two Stage

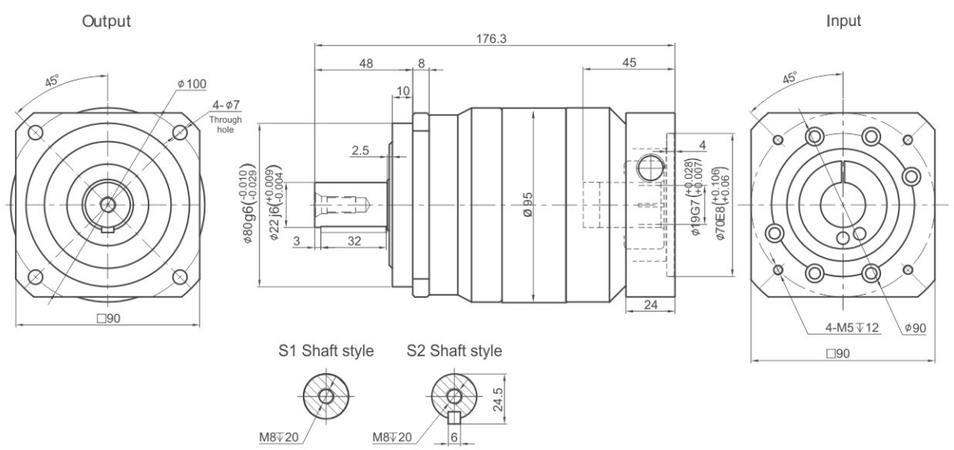

Performance Data

TCB series planetary reducer has modular design compact structure with high reliability and efficiency.
It is a perfect optimization of both performance and cost.

TCB090			One Stage								Two Stage										
Speed Ratio	i		3	4	5	6	7	8	9	10	15	20	25	30	35	40	50	60	70	80	100
Nominal Output Torque	T_1	Nm	100	110	150	140	135	120	-	100	100	110	150	140	135	120	150	140	135	120	100
Emergency Stop Torque	T_2	Nm	$T_1 \times 3$								$T_1 \times 3$										
Nominal Input Speed	S_1	rpm	3000								3000										
Maximum Input Speed	S_2	rpm	6000								6000										
Maximum Output Torque	T_4	Nm	$T_1 \times 3 \times 60\%$								$T_1 \times 3 \times 60\%$										
Maximum Radial Force	F_a	N	3250								3250										
Maximum Axial Force	F_b	N	1625								1625										
Torsional Rigidity	–	Nm/arcmin	14								14										
Efficiency	η	%	⩾97								⩾94										
Service Life	–	h	20000								20000										
Noise	–	dB	⩽60								60										
Weight	–	Kg	3.5								5.1										
Backlash	P0	arcmin	–								–										
	P1		⩽3								⩽5										
	P2		⩽5								⩽7										
Operating Temperature	–	℃	-20~90								-20~90										
Lubrication	–		Synthetic Grease								Synthetic grease										
Protection Class	–		IP65								IP65										
Mounting Position	–		Any Direction								Any Direction										
Moment of Inertia	J	kg.cm²	0.61	0.48	0.47	0.45	0.45	0.44	-	0.44	0.47						0.44				

Notes:

- Speed ratio (i=Sin/Sout)
- When the output speed is 100 rpm, it acts on the center of the output shaft.
- For continuous operation, the service life is no less than 10,000 hours.
- The noise value was measured based on the input rotational speed of 3000 rpm, i=10.

Any product models and parameters in this sample are subject to change without prior notice. Please confirm with the company before ordering.

TCB120 Series

TCB120 One Stage

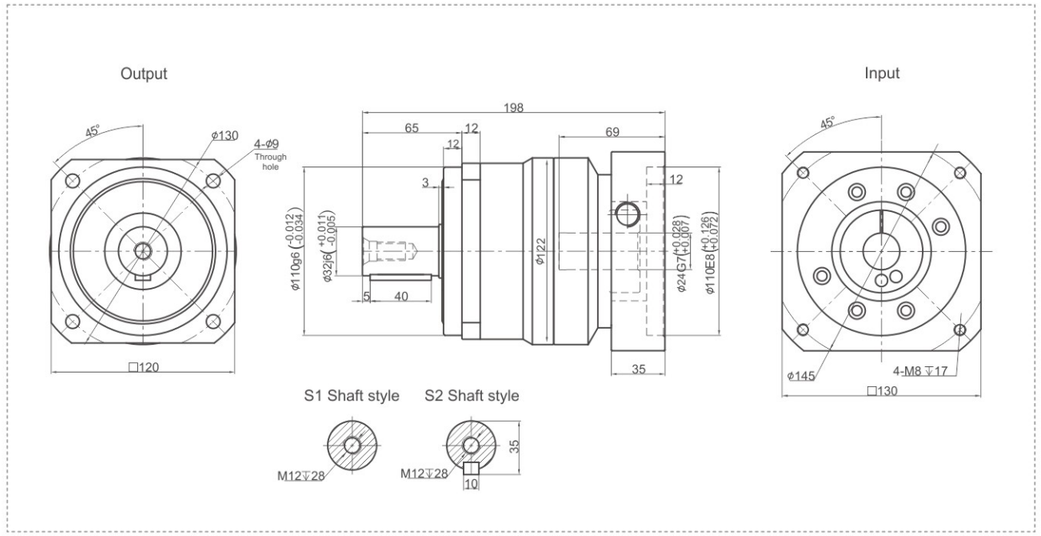

TCB120 Two Stage

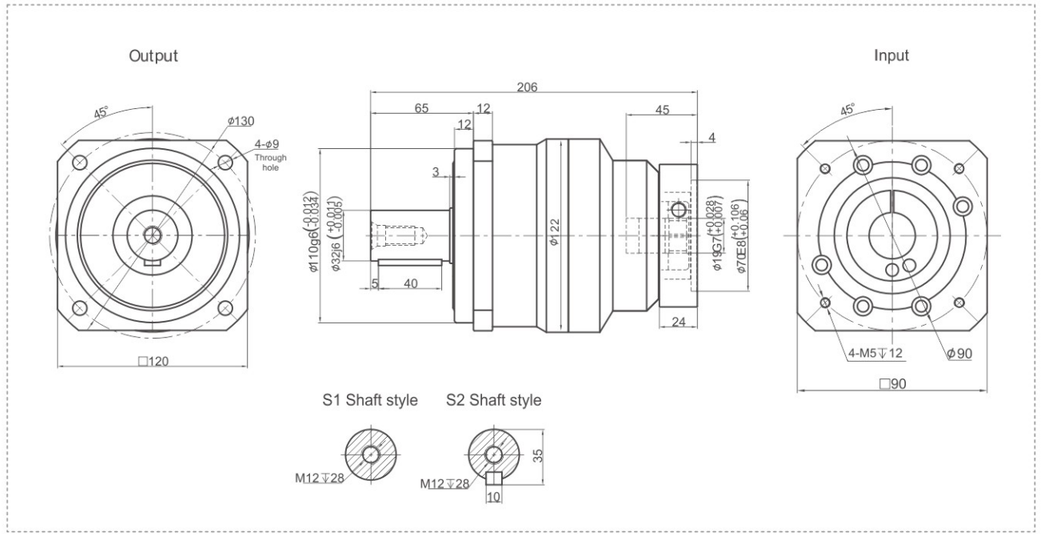

Performance Data

TCB series planetary reducer has modular design compact structure with high reliability and efficiency.
It is a perfect optimization of both performance and cost.

TCB120			One Stage								Two Stage										
Speed Ratio	i		3	4	5	6	7	8	9	10	15	20	25	30	35	40	50	60	70	80	100
Nominal Output Torque	T_1	Nm	200	280	320	310	300	255	-	220	200	280	320	310	300	255	320	310	300	255	220
Emergency Stop Torque	T_2	Nm	$T_1 \times 3$								$T_1 \times 3$										
Nominal Input Speed	S_1	rpm	3000								3000										
Maximum Input Speed	S_2	rpm	6000								6000										
Maximum Output Torque	T_4	Nm	$T_1 \times 3 \times 60\%$								$T_1 \times 3 \times 60\%$										
Maximum Radial Force	F_a	N	6700								6700										
Maximum Axial Force	F_b	N	3350								3350										
Torsional Rigidity	–	Nm/arcmin	25								25										
Efficiency	η	%	⩾97								⩾94										
Service Life	–	h	20000								20000										
Noise	–	dB	⩽63								⩽63										
Weight	–	Kg	8								9.5										
Backlash	P0	arcmin	–								–										
	P1		⩽3								⩽5										
	P2		⩽5								⩽7										
Operating Temperature	–	℃	-20~90								-20~90										
Lubrication	–		Synthetic Grease								Synthetic grease										
Protection Class	–		IP65								IP65										
Mounting Position	–		Any Direction								Any Direction										
Moment of Inertia	J	$kg.cm^2$	3.25	2.74	2.71	2.65	2.62	2.58	-	2.57	0.47						0.44				

Notes:

- Speed ratio (i=Sin/Sout)
- When the output speed is 100 rpm, it acts on the center of the output shaft.
- For continuous operation, the service life is no less than 10,000 hours.
- The noise value was measured based on the input rotational speed of 3000 rpm, i=10.

Any product models and parameters in this sample are subject to change without prior notice. Please confirm with the company before ordering.

TCB140 Series

TCB140 One Stage

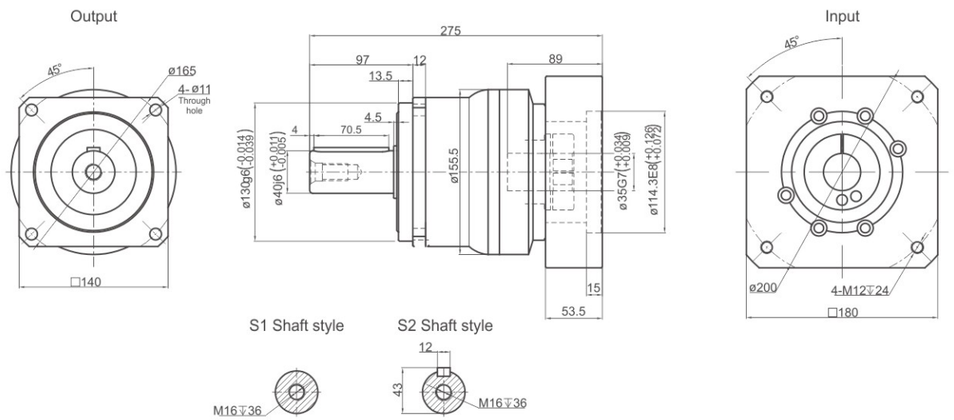

TCB140 Two Stage

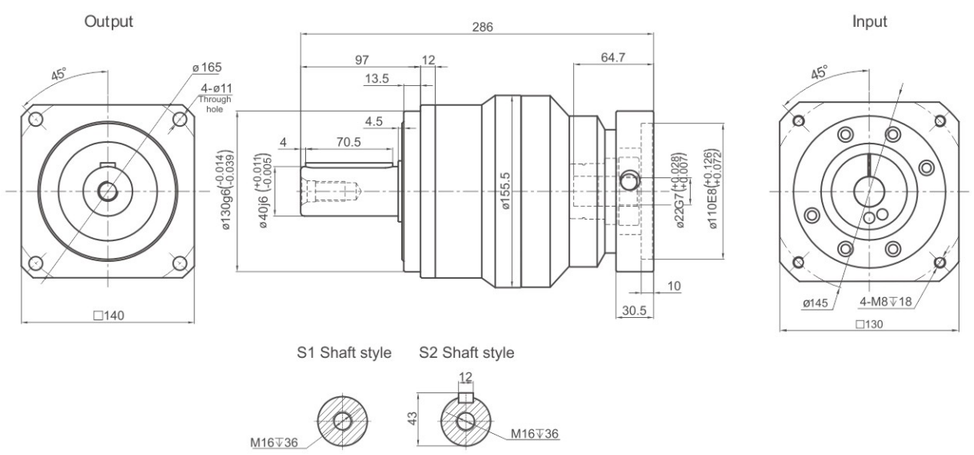

Performance Data

TCB series planetary reducer has modular design compact structure with high reliability and efficiency.
It is a perfect optimization of both performance and cost.

TCB140			One Stage								Two Stage										
Speed Ratio	i		3	4	5	6	7	8	9	10	15	20	25	30	35	40	50	60	70	80	100
Nominal Output Torque	T_1	Nm	340	535	650	600	550	500	-	445	340	535	650	600	550	500	650	600	550	500	445
Emergency Stop Torque	T_2	Nm	$T_1 \times 3$								$T_1 \times 3$										
Nominal Input Speed	S_1	rpm	2000								2000										
Maximum Input Speed	S_2	rpm	4000								4000										
Maximum Output Torque	T_4	Nm	$T_1 \times 3 \times 60\%$								$T_1 \times 3 \times 60\%$										
Maximum Radial Force	F_a	N	9400								9400										
Maximum Axial Force	F_b	N	4700								4700										
Torsional Rigidity	–	Nm/arcmin	50								50										
Efficiency	η	%	⩾97								⩾94										
Service Life	–	h	20000								20000										
Noise	–	dB	⩽65								⩽65										
Weight	–	Kg	17								19.8										
Backlash	P0	arcmin	–								–										
	P1		⩽3								⩽5										
	P2		⩽5								⩽7										
Operating Temperature	–	℃	-20~90								-20~90										
Lubrication	–		Synthetic Grease								Synthetic grease										
Protection Class	–		IP65								IP65										
Mounting Position	–		Any Direction								Any Direction										
Moment of Inertia	J	$kg.cm^2$	9.21	7.54	7.42	7.25	7.14	7.07	-	7.03	2.71						2.57				

Notes:

- Speed ratio (i=Sin/Sout)
- When the output speed is 100 rpm, it acts on the center of the output shaft.
- For continuous operation, the service life is no less than 10,000 hours.
- The noise value was measured based on the input rotational speed of 3000 rpm, i=10.

Any product models and parameters in this sample are subject to change without prior notice. Please confirm with the company before ordering.

TCB180 Series

TCB180 One Stage

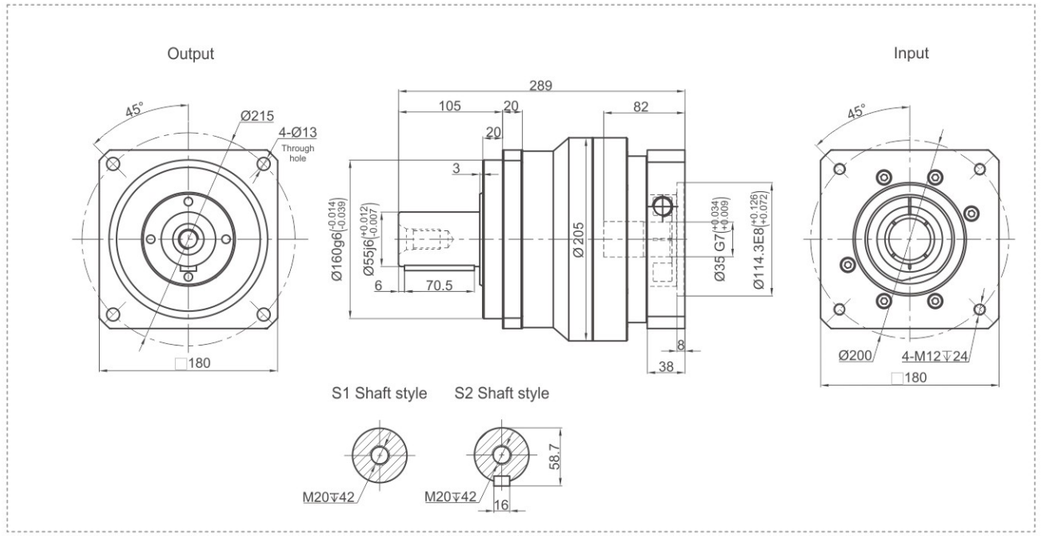

TCB180 Two Stage

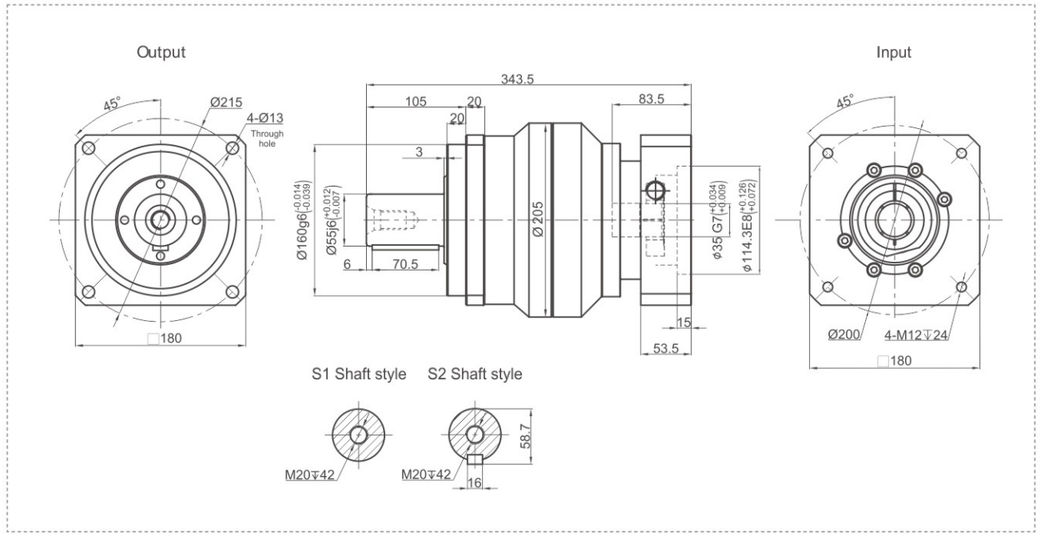

Performance Data

TCB series planetary reducer has modular design compact structure with high reliability and efficiency.
It is a perfect optimization of both performance and cost.

TCB180			One Stage								Two Stage										
Speed Ratio	i		3	4	5	6	7	8	9	10	15	20	25	30	35	40	50	60	70	80	100
Nominal Output Torque	T_1	Nm	580	1020	1180	1050	1050	970	-	870	580	1020	1180	1050	1050	970	1180	1050	1050	970	870
Emergency Stop Torque	T_2	Nm	$T_1 \times 3$								$T_1 \times 3$										
Nominal Input Speed	S_1	rpm	2000								2000										
Maximum Input Speed	S_2	rpm	4000								4000										
Maximum Output Torque	T_4	Nm	$T_1 \times 3 \times 60\%$								$T_1 \times 3 \times 60\%$										
Maximum Radial Force	F_a	N	14100								14100										
Maximum Axial Force	F_b	N	7050								7050										
Torsional Rigidity	–	Nm/arcmin	140								140										
Efficiency	η	%	⩾97								⩾94										
Service Life	–	h	20000								20000										
Noise	–	dB	⩽67								⩽67										
Weight	–	Kg	20.7								27										
Backlash	P0	arcmin	–								–										
	P1		⩽3								⩽5										
	P2		⩽5								⩽7										
Operating Temperature	–	℃	-20~90								-20~90										
Lubrication	–		Synthetic Grease								Synthetic grease										
Protection Class	–		IP65								IP65										
Mounting Position	–		Any Direction								Any Direction										
Moment of Inertia	J	$kg.cm^2$	28.98	23.67	23.29	22.75	22.48	22.59	-	22.51	7.42						7.03				

Notes:

- Speed ratio (i=Sin/Sout)
- When the output speed is 100 rpm, it acts on the center of the output shaft.
- For continuous operation, the service life is no less than 10,000 hours.
- The noise value was measured based on the input rotational speed of 3000 rpm, i=10.

Any product models and parameters in this sample are subject to change without prior notice. Please confirm with the company before ordering.

TCBR042 Series

TCBR042 One Stage

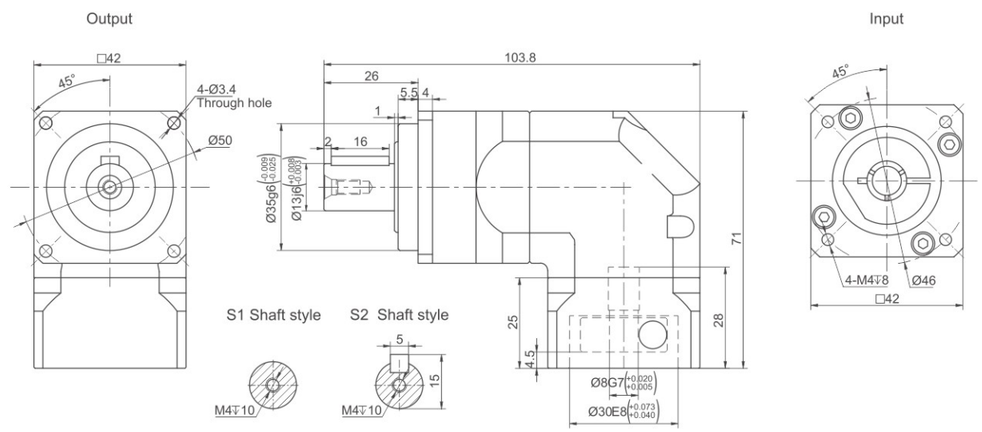

TCBR042 Two Stage

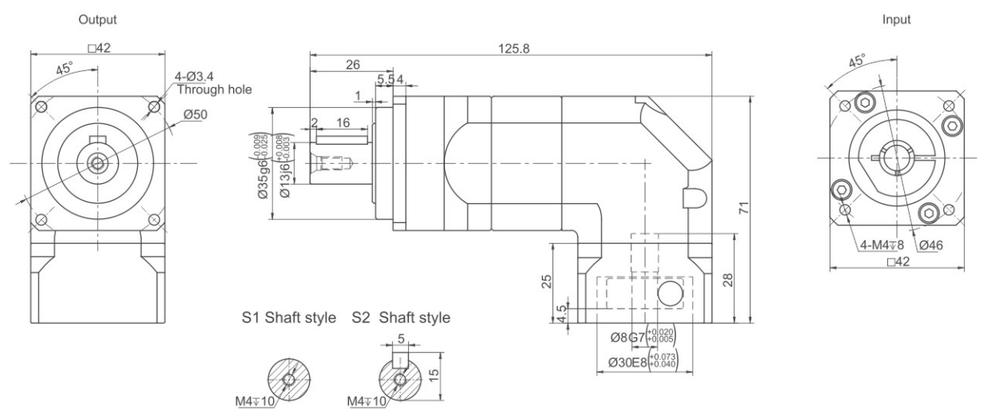

Performance Data

TCBR series planetary reducer has modular design compact structure with high reliability and efficiency.
It is a perfect optimization of both performance and cost.

TCBR042			One Stage						Two Stage									
Speed Ratio	i	-	4	5	6	7	8	10	20	25	30	35	40	50	60	70	80	100
Nominal Output Torque	T_1	Nm	-	11	13	16	17	15	13	13	13	16	17	15	13	16	17	15	13
Emergency Stop Torque	T_2	Nm	$T_1 \times 3$						$T_1 \times 3$									
Nominal Input Speed	S_1	rpm	3000						3000									
Maximum Input Speed	S_2	rpm	6000						6000									
Maximum Output Torque	T_4	Nm	$T_1 \times 3 \times 60\%$						$T_1 \times 3 \times 60\%$									
Maximum Radial Force	F_a	N	760						760									
Maximum Axial Force	F_b	N	380						380									
Torsional Rigidity	–	Nm/arcmin	3						3									
Efficiency	η	%	⩾95						⩾92									
Service Life	–	h	20000						20000									
Noise	–	dB	⩽63						⩽63									
Weight	–	Kg	0.9						1.1									
Backlash	P0	arcmin	-						-									
	P1		⩽6						⩽9									
	P2		⩽8						⩽12									
Operating Temperature	–	℃	-20~90						-20~90									
Lubrication	–		Synthetic Grease						Synthetic grease									
Protection Class	–		IP65						IP65									
Mounting Position	–		Any Direction						Any Direction									
Moment of Inertia	J	$kg.cm^2$	0.09						0.09									

Notes:

- Speed ratio (i=Sin/Sout)
- When the output speed is 100 rpm, it acts on the center of the output shaft.
- For continuous operation, the service life is no less than 10,000 hours.
- The noise value was measured based on the input rotational speed of 3000 rpm, i=10.

Any product models and parameters in this sample are subject to change without prior notice. Please confirm with the company before ordering.

TCBR060 Series

TCBR060 One Stage

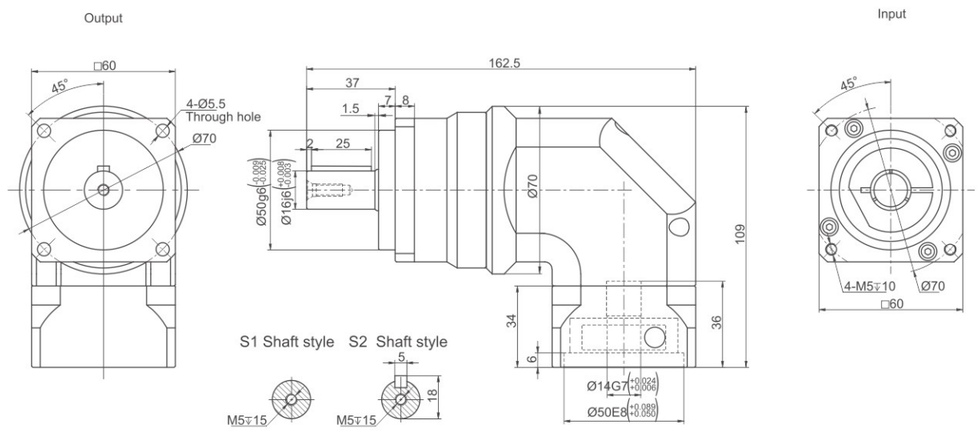

TCBR060 Two Stage

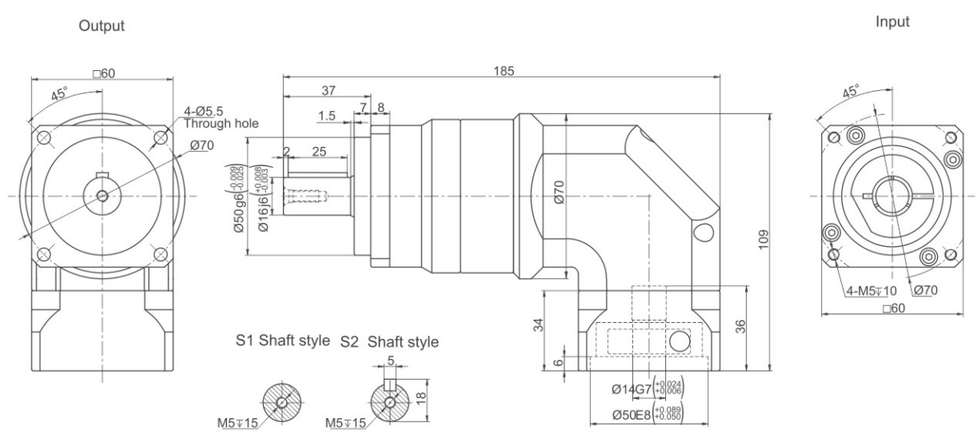

Performance Data

TCBR series planetary reducer has modular design compact structure with high reliability and efficiency.
It is a perfect optimization of both performance and cost.

TCBR060			One Stage											Two Stage											
Speed Ratio	i		3	4	5	6	7	8	10	12	14	16	20	25	30	35	40	50	60	70	80	100	120	140	160	200
Nominal Output Torque	T_1	Nm	35	45	55	50	46	43	40	50	40	43	40	55	50	46	43	55	50	46	43	40	50	46	43	40
Emergency Stop Torque	T_2	Nm	$T_1 \times 3$											$T_1 \times 3$												
Nominal Input Speed	S_1	rpm	3000											3000												
Maximum Input Speed	S_2	rpm	6000											6000												
Maximum Output Torque	T_4	Nm	$T_1 \times 3 \times 60\%$											$T_1 \times 3 \times 60\%$												
Maximum Radial Force	F_a	N	1450											1450												
Maximum Axial Force	F_b	N	724											724												
Torsional Rigidity	–	Nm/arcmin	6											6												
Efficiency	η	%	⩾95											⩾92												
Service Life	–	h	20000											20000												
Noise	–	dB	⩽66											⩽66												
Weight	–	Kg	1.5											2.1												
Backlash	P0	arcmin	-											-												
	P1		⩽6											⩽9												
	P2		⩽8											⩽12												
Operating Temperature	–	℃	-20~90											-20~90												
Lubrication	–		Synthetic Grease											Synthetic grease												
Protection Class	–		IP65											IP65												
Mounting Position	–		Any Direction											Any Direction												
Moment of Inertia	J	kg.cm²	0.35							0.07				0.09												

Notes:

- Speed ratio (i=Sin/Sout)
- When the output speed is 100 rpm, it acts on the center of the output shaft.
- For continuous operation, the service life is no less than 10,000 hours.
- The noise value was measured based on the input rotational speed of 3000 rpm, i=10.

Any product models and parameters in this sample are subject to change without prior notice. Please confirm with the company before ordering.

TCBR090 Series

TCBR090 One Stage

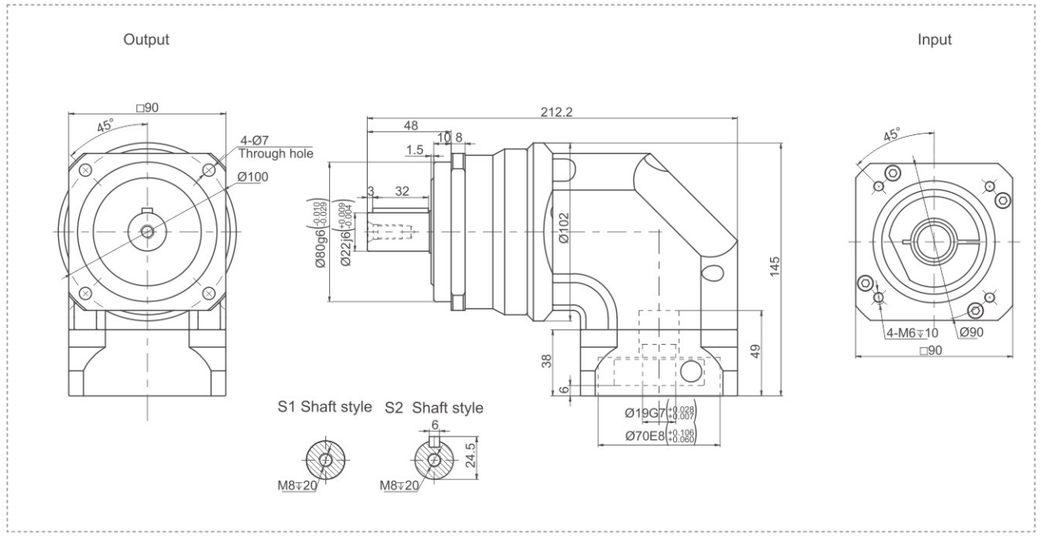

TCBR090 Two Stage

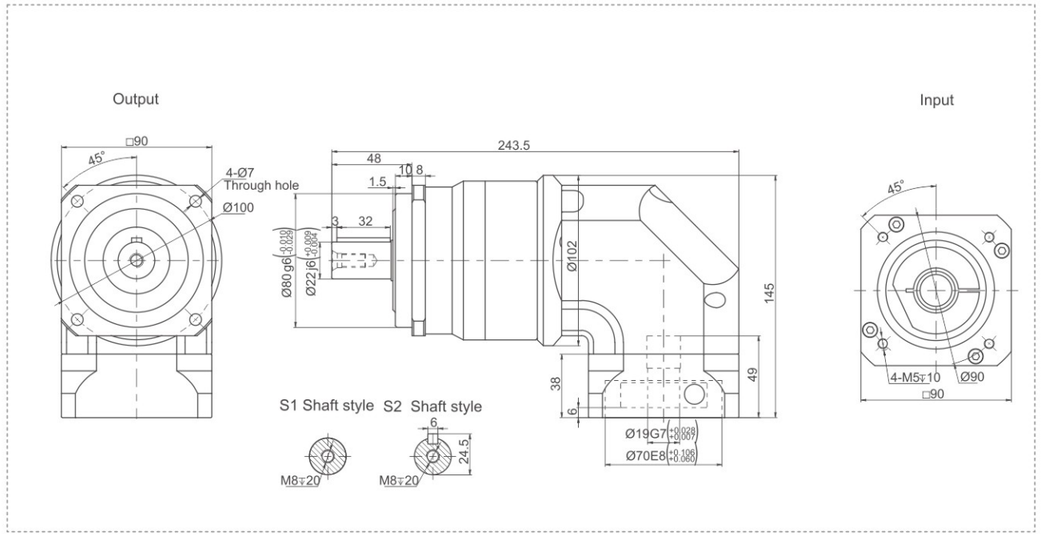

Performance Data

TCBR series planetary reducer has modular design compact structure with high reliability and efficiency.
It is a perfect optimization of both performance and cost.

TCBR090			One Stage											Two Stage											
Speed Ratio	i		3	4	5	6	7	8	10	12	14	16	20	25	30	35	40	50	60	70	80	100	120	140	160	200
Nominal Output Torque	T_1	Nm	85	115	140	140	135	115	97	140	135	115	97	140	140	135	115	140	140	135	115	97	140	135	115	97
Emergency Stop Torque	T_2	Nm	$T_1 \times 3$											$T_1 \times 3$												
Nominal Input Speed	S_1	rpm	3000											3000												
Maximum Input Speed	S_2	rpm	6000											6000												
Maximum Output Torque	T_4	Nm	$T_1 \times 3 \times 60\%$											$T_1 \times 3 \times 60\%$												
Maximum Radial Force	F_a	N	3200											3200												
Maximum Axial Force	F_b	N	1600											1600												
Torsional Rigidity	–	Nm/arcmin	14											14												
Efficiency	η	%	⩾95											⩾92												
Service Life	–	h	20000											20000												
Noise	–	dB	⩽67											⩽67												
Weight	–	Kg	6.4											7.7												
Backlash	P0	arcmin	⩽4											⩽7												
	P1		⩽6											⩽9												
	P2		⩽8											⩽12												
Operating Temperature	–	℃	-20~90											-20~90												
Lubrication	–		Synthetic Grease											Synthetic grease												
Protection Class	–		IP65											IP65												
Mounting Position	–		Any Direction											Any Direction												
Moment of Inertia	J	kg.cm²	2.25							1.87				0.35									0.31			

Notes:

- Speed ratio (i=Sin/Sout)
- When the output speed is 100 rpm, it acts on the center of the output shaft.
- For continuous operation, the service life is no less than 10,000 hours.
- The noise value was measured based on the input rotational speed of 3000 rpm, i=10.

Any product models and parameters in this sample are subject to change without prior notice. Please confirm with the company before ordering.

TCBR120 Series

TCBR120 One Stage

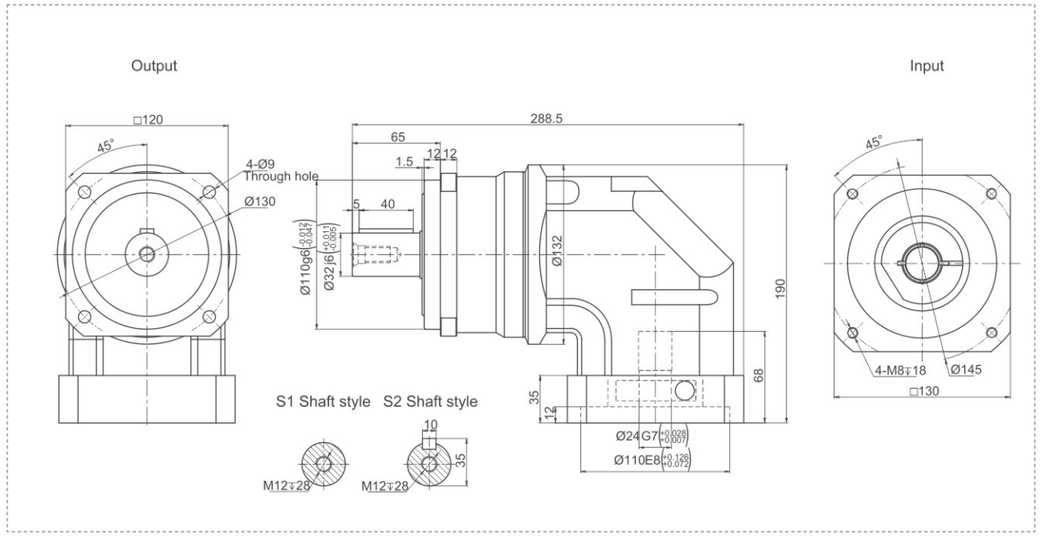

TCBR120 Two Stage

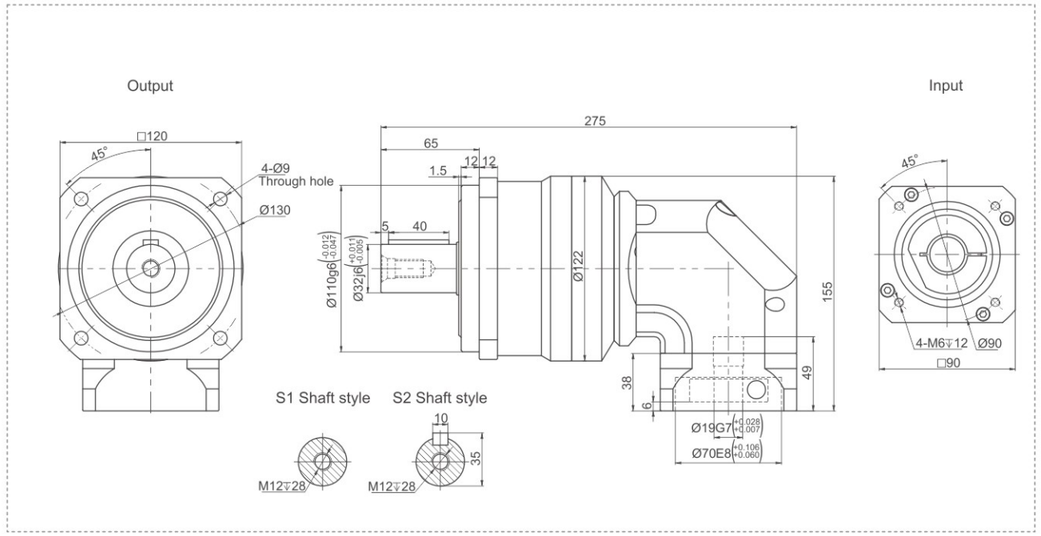

Performance Data

TCBR series planetary reducer has modular design compact structure with high reliability and efficiency.
It is a perfect optimization of both performance and cost.

TCBR120			One Stage												Two Stage												
Speed Ratio	i		3	4	5	6	7	8	10	12	14	16	20	25	30	35	40	50	60	70	80	100	120	140	160	200
Nominal Output Torque	T_1	Nm	190	245	315	305	290	255	225	305	290	255	225	315	305	290	255	315	305	290	255	225	305	290	255	225
Emergency Stop Torque	T_2	Nm	$T_1 \times 3$											$T_1 \times 3$												
Nominal Input Speed	S_1	rpm	3000											3000												
Maximum Input Speed	S_2	rpm	5000											5000												
Maximum Output Torque	T_4	Nm	$T_1 \times 3 \times 60\%$											$T_1 \times 3 \times 60\%$												
Maximum Radial Force	F_a	N	6600											6600												
Maximum Axial Force	F_b	N	3200											3200												
Torsional Rigidity	–	Nm/arcmin	25											25												
Efficiency	η	%	⩾95											⩾92												
Service Life	–	h	20000											20000												
Noise	–	dB	⩽70											⩽70												
Weight	–	Kg	13											14												
Backlash	P0	arcmin	⩽4											⩽7												
	P1		⩽6											⩽9												
	P2		⩽8											⩽12												
Operating Temperature	–	°C	-20~90											-20~90												
Lubrication	–		Synthetic Grease											Synthetic grease												
Protection Class	–		IP65											IP65												
Mounting Position	–		Any Direction											Any Direction												
Moment of Inertia	J	kg.cm²	6.84							6.25				2.25									1.87			

Notes:

- Speed ratio (i=Sin/Sout)
- When the output speed is 100 rpm, it acts on the center of the output shaft.
- For continuous operation, the service life is no less than 10,000 hours.
- The noise value was measured based on the input rotational speed of 3000 rpm, i=10.

Any product models and parameters in this sample are subject to change without prior notice. Please confirm with the company before ordering.

TCE070 Series

TCE070 One Stage

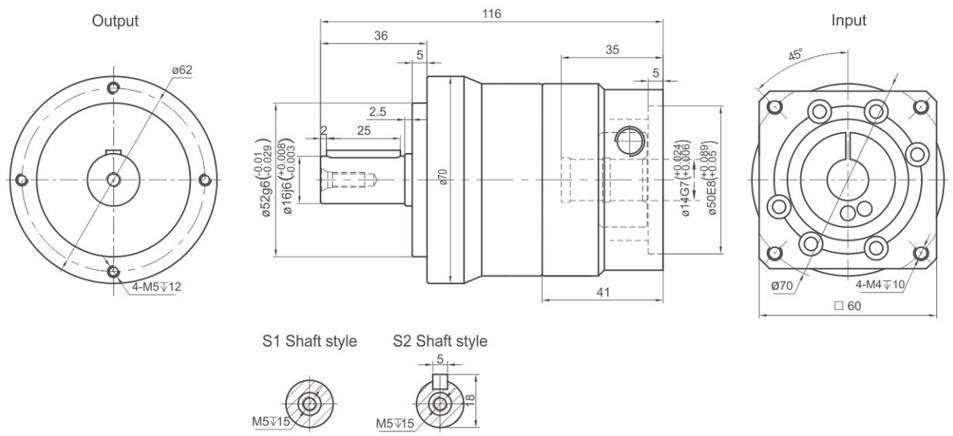

TCE070 Two Stage

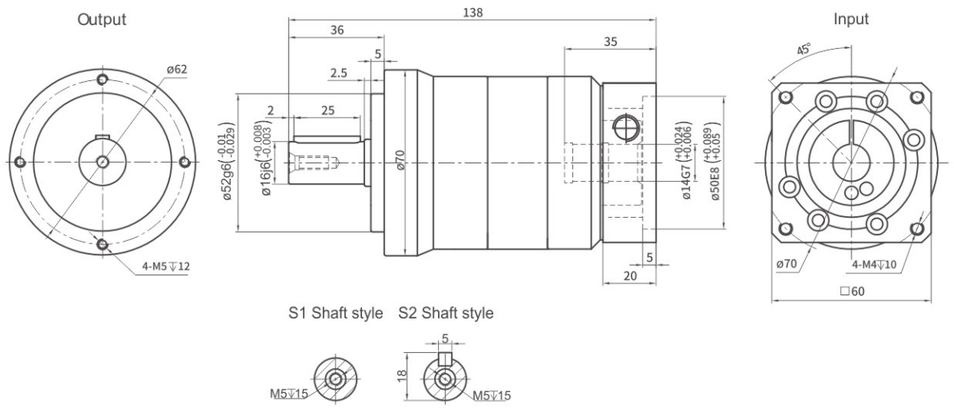

Performance Data

TCE series planetary reducer has modular design compact structure with high reliability and efficiency.
It is a perfect optimization of both performance and cost.

TCE070			One Stage									Two Stage									
Speed Ratio	i		3	4	5	6	7	8	9	10	15	20	25	30	35	40	50	60	70	80	100
Nominal Output Torque	T_1	Nm	40	45	55	50	45	45	-	35	40	45	55	50	45	45	55	50	45	45	35
Emergency Stop Torque	T_2	Nm	$T_1 \times 3$									$T_1 \times 3$									
Nominal Input Speed	S_1	rpm	3000									3000									
Maximum Input Speed	S_2	rpm	6000									6000									
Maximum Output Torque	T_4	Nm	$T_1 \times 3 \times 60\%$									$T_1 \times 3 \times 60\%$									
Maximum Radial Force	F_a	N	1530									1530									
Maximum Axial Force	F_b	N	765									765									
Torsional Rigidity	–	Nm/arcmin	7									7									
Efficiency	η	%	⩾97									⩾94									
Service Life	–	h	20000									20000									
Noise	–	dB	⩽58									⩽58									
Weight	–	Kg	1.6									1.9									
Backlash	P0	arcmin	–									–									
	P1		⩽3									⩽5									
	P2		⩽5									⩽7									
Operating Temperature	–	℃	-20~90									-20~90									
Lubrication	–		Synthetic Grease									Synthetic grease									
Protection Class	–		IP65									IP65									
Mounting Position	–		Any Direction									Any Direction									
Moment of Inertia	J	$kg.cm^2$	0.16	0.14	0.13							0.13									

Notes:

- Speed ratio (i=Sin/Sout)
- When the output speed is 100 rpm, it acts on the center of the output shaft.
- For continuous operation, the service life is no less than 10,000 hours.
- The noise value was measured based on the input rotational speed of 3000 rpm, i=10.

Any product models and parameters in this sample are subject to change without prior notice. Please confirm with the company before ordering.

TCE090 Series

TCE090 One Stage

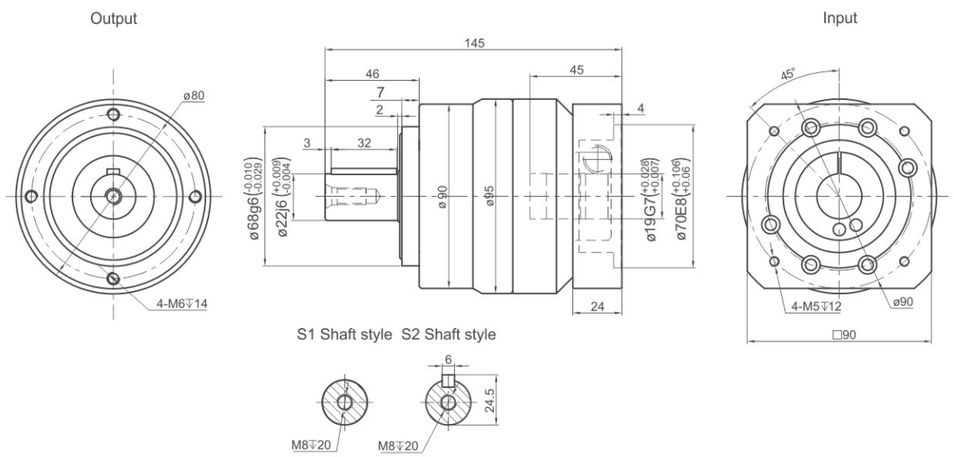

TCE090 Two Stage

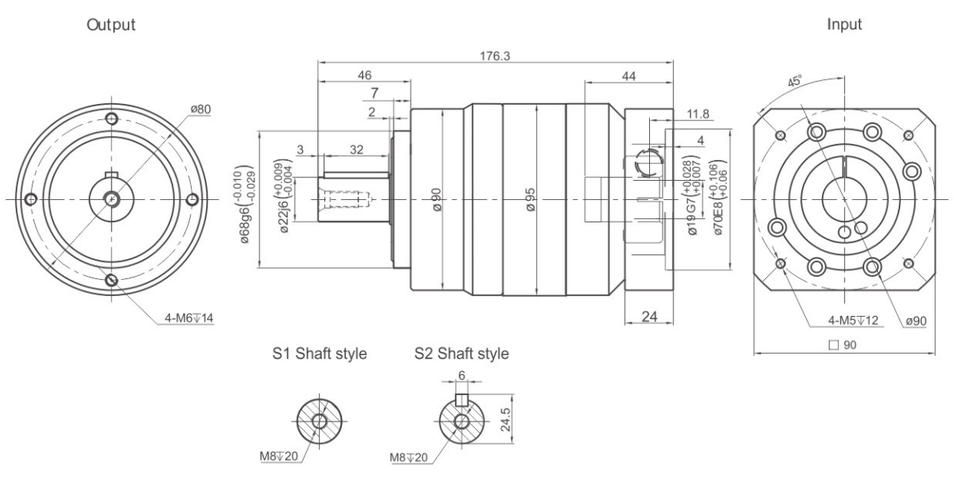

Performance Data

TCE series planetary reducer has modular design compact structure with high reliability and efficiency.
It is a perfect optimization of both performance and cost.

TCE090			One Stage								Two Stage										
Speed Ratio	i		3	4	5	6	7	8	9	10	15	20	25	30	35	40	50	60	70	80	100
Nominal Output Torque	T_1	Nm	100	110	150	140	135	120	-	100	100	110	150	140	135	120	150	140	135	120	100
Emergency Stop Torque	T_2	Nm	$T_1 \times 3$								$T_1 \times 3$										
Nominal Input Speed	S_1	rpm	3000								3000										
Maximum Input Speed	S_2	rpm	6000								6000										
Maximum Output Torque	T_4	Nm	$T_1 \times 3 \times 60\%$								$T_1 \times 3 \times 60\%$										
Maximum Radial Force	F_a	N	3250								3250										
Maximum Axial Force	F_b	N	1625								1625										
Torsional Rigidity	–	Nm/arcmin	14								14										
Efficiency	η	%	⩾97								⩾94										
Service Life	–	h	20000								20000										
Noise	–	dB	⩽60								⩽60										
Weight	–	Kg	3.4								5.2										
Backlash	P0	arcmin	–								–										
	P1		⩽3								⩽5										
	P2		⩽5								⩽7										
Operating Temperature	–	℃	-20~90								-20~90										
Lubrication	–		Synthetic Grease								Synthetic grease										
Protection Class	–		IP65								IP65										
Mounting Position	–		Any Direction								Any Direction										
Moment of Inertia	J	$kg.cm^2$	0.61	0.48	0.47	0.45	0.45	0.44	-	0.44	0.47									0.44	

Notes:

- Speed ratio (i=Sin/Sout)
- When the output speed is 100 rpm, it acts on the center of the output shaft.
- For continuous operation, the service life is no less than 10,000 hours.
- The noise value was measured based on the input rotational speed of 3000 rpm, i=10.

Any product models and parameters in this sample are subject to change without prior notice. Please confirm with the company before ordering.

TCE120 Series

TCE120 One Stage

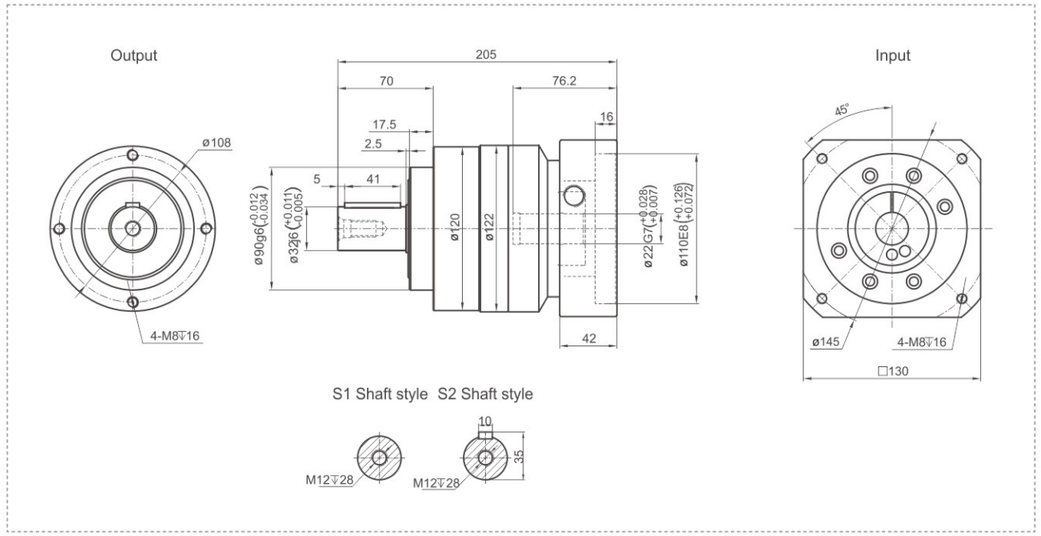

TCE120 Two Stage

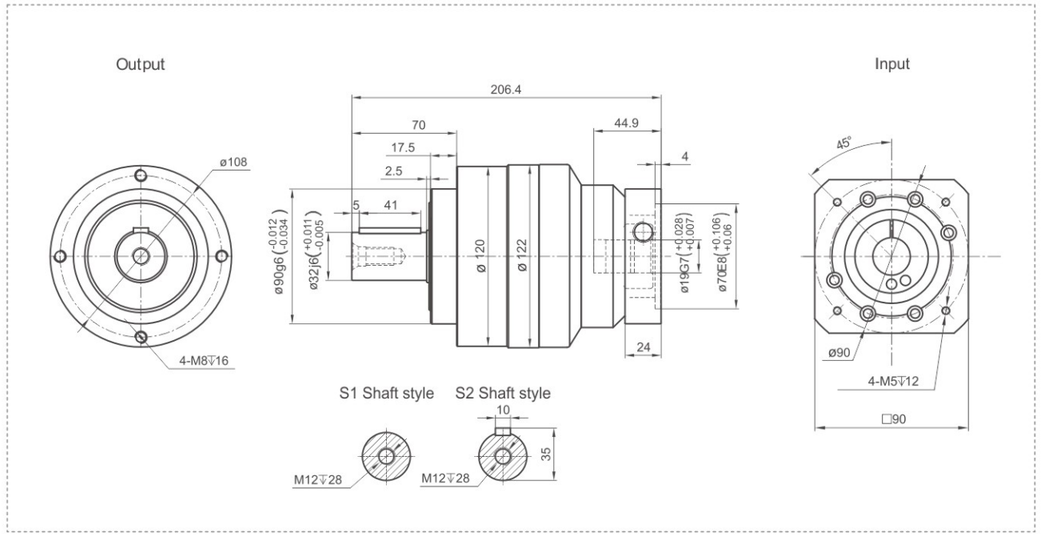

Performance Data

TCE series planetary reducer has modular design compact structure with high reliability and efficiency.
It is a perfect optimization of both performance and cost.

TCE120			One Stage								Two Stage										
Speed Ratio	i		3	4	5	6	7	8	9	10	15	20	25	30	35	40	50	60	70	80	100
Nominal Output Torque	T_1	Nm	200	280	320	310	300	255	-	220	200	280	320	310	300	255	320	310	300	255	220
Emergency Stop Torque	T_2	Nm	$T_1 \times 3$								$T_1 \times 3$										
Nominal Input Speed	S_1	rpm	3000								3000										
Maximum Input Speed	S_2	rpm	6000								6000										
Maximum Output Torque	T_4	Nm	$T_1 \times 3 \times 60\%$								$T_1 \times 3 \times 60\%$										
Maximum Radial Force	F_a	N	6700								6700										
Maximum Axial Force	F_b	N	3350								3350										
Torsional Rigidity	–	Nm/arcmin	25								25										
Efficiency	η	%	≥97								≥94										
Service Life	–	h	20000								20000										
Noise	–	dB	≤63								≤63										
Weight	–	Kg	7.8								8.5										
Backlash	P0	arcmin	–								–										
	P1		≤3								≤5										
	P2		≤5								≤7										
Operating Temperature	–	℃	-20~90								-20~90										
Lubrication	–		Synthetic Grease								Synthetic grease										
Protection Class	–		IP65								IP65										
Mounting Position	–		Any Direction								Any Direction										
Moment of Inertia	J	$kg.cm^2$	3.25	2.74	2.71	2.65	2.62	2.58	-	2.57	0.47									0.44	

Notes:

- Speed ratio (i=Sin/Sout)
- When the output speed is 100 rpm, it acts on the center of the output shaft.
- For continuous operation, the service life is no less than 10,000 hours.
- The noise value was measured based on the input rotational speed of 3000 rpm, i=10.

Any product models and parameters in this sample are subject to change without prior notice. Please confirm with the company before ordering.

TCE155 Series

TCE155 One Stage

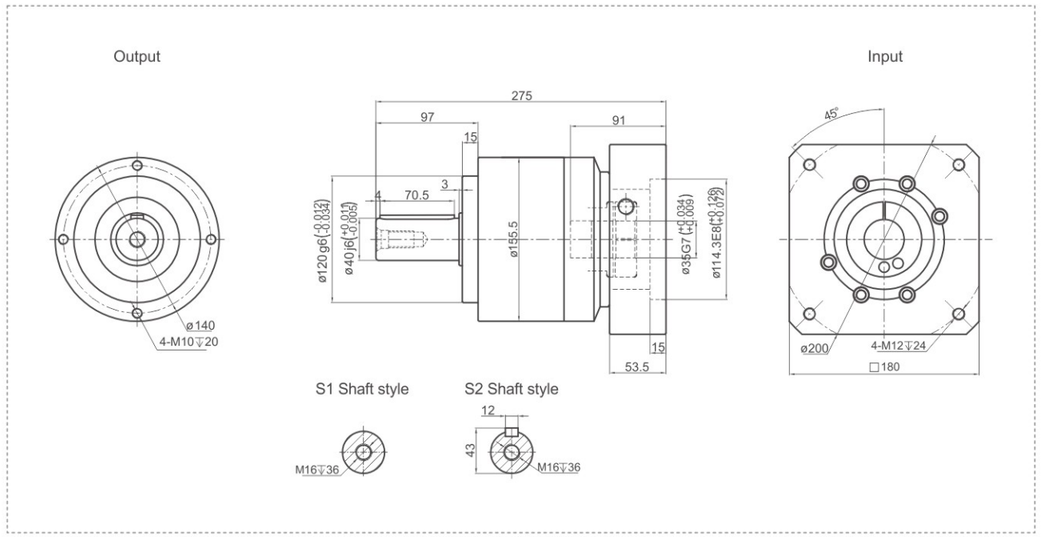

TCE155 Two Stage

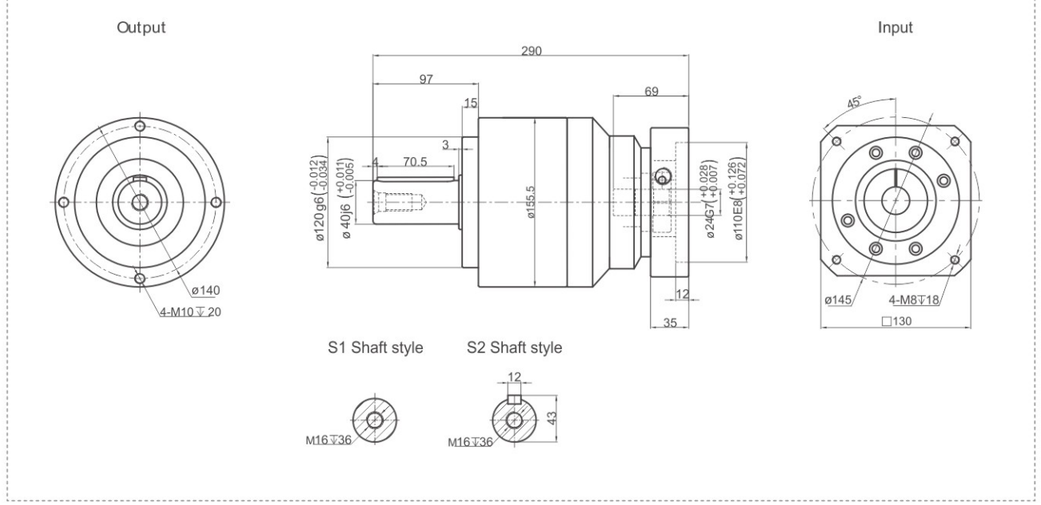

Performance Data

TCE series planetary reducer has modular design compact structure with high reliability and efficiency.
It is a perfect optimization of both performance and cost.

TCE155			One Stage								Two Stage										
Speed Ratio	i		3	4	5	6	7	8	9	10	15	20	25	30	35	40	50	60	70	80	100
Nominal Output Torque	T_1	Nm	340	535	650	600	550	500	-	445	340	535	650	600	550	500	650	600	550	500	445
Emergency Stop Torque	T_2	Nm	$T_1 \times 3$								$T_1 \times 3$										
Nominal Input Speed	S_1	rpm	2000								2000										
Maximum Input Speed	S_2	rpm	4000								4000										
Maximum Output Torque	T_4	Nm	$T_1 \times 3 \times 60\%$								$T_1 \times 3 \times 60\%$										
Maximum Radial Force	F_a	N	9400								9400										
Maximum Axial Force	F_b	N	4700								4700										
Torsional Rigidity	–	Nm/arcmin	50								50										
Efficiency	η	%	⩾97								⩾94										
Service Life	–	h	20000								20000										
Noise	–	dB	⩽65								⩽65										
Weight	–	Kg	19								20										
Backlash	P0	arcmin	–								–										
	P1		⩽3								⩽5										
	P2		⩽5								⩽7										
Operating Temperature	–	℃	-20~90								-20~90										
Lubrication	–		Synthetic Grease								Synthetic grease										
Protection Class	–		IP65								IP65										
Mounting Position	–		Any Direction								Any Direction										
Moment of Inertia	J	$kg.cm^2$	9.21	7.54	7.42	7.25	7.14	7.07	-	7.03	2.71						2.57				

Notes:

- Speed ratio (i=Sin/Sout)
- When the output speed is 100 rpm, it acts on the center of the output shaft.
- For continuous operation, the service life is no less than 10,000 hours.
- The noise value was measured based on the input rotational speed of 3000 rpm, i=10.

Any product models and parameters in this sample are subject to change without prior notice. Please confirm with the company before ordering.